SUBJECT PAGE NO.


3.1 FASTENER TORQUE VALUES..... 3-1
3.2 SPECIFICATIONS..... 3-2
3.3 SERVICE WEAR LIMITS..... 3-5
3.4 ENGINE OIL FLOW..... 3-7
3.5 OIL PUMP OPERATION..... 3-12
3.6 BREATHER OPERATION..... 3-14
3.7 OIL PRESSURE..... 3-15
3.8 TROUBLESHOOTING..... 3-17
3.9 HOW TO USE THIS SECTION..... 3-19
3.10 TOP END SERVICE..... 3-20
3.11 CAM COMPARTMENT SERVICE..... 3-22
3.12 STRIPPING MOTORCYCLE FOR SERVICE..... 3-24
3.13 ASSEMBLING MOTORCYCLE AFTER SERVICE..... 3-25
3.14 REMOVING ENGINE FRON CHASSIS..... 3-26
3.15 INSTALLING ENGINE IN CHASSIS..... 3-27
3.16 TOP END OVERHAUL: DISASSEMBLY..... 3-29
3.17 BREATHER ASSEMBLY..... 3-35
3.18 ROCKER ARM SUPPORT PLATE..... 3-36
3.19 PUSHRODS, LIFTERS AND COVERS..... 3-39
3.20 CYLINDER HEAD..... 3-42
3.21 CYLINDER..... 3-52
3.22 PISTON..... 3-56
3.23 TOP END OVERHAUL: ASSEMBLY..... 3-60
3.24 CAM COMPARTMENT AND COMPONENTS..... 3-70
3.25 OIL PUMP..... 3-83
3.26 CRANKCASE DISASSEMBLY AND REPAIR..... 3-85
3.27 FLYWHEEL AND CONNECTING RODS..... 3-93
3.28 CRANKCASE ASSEMBLY..... 3-95
3.29 OIL PAN..... 3-97

# NOTES

## FASTENER TORQUE VALUES IN THIS CHAPTER

The table below lists torque values for all fasteners presented in this chapter.

| FASTENER | TORQUE VALUE | | NOTES |
|---|---|---|---|
| Breather assembly screws | 120-156 **in-lbs** | 13.6-17.6 Nm | 3.23 TOP END OVERHAUL: ASSEMBLY, Breather and Rocker Cover |
| Cam chain tensioner fasteners | 100-120 **in-lbs** | 11.3-13.6 Nm | 3.24 CAM COMPARTMENT AND COMPONENTS, Cam Support Plate and Cover Installation |
| Cam cover screws | 125-155 **in-lbs** | 14.1-17.5 Nm | 3.24 CAM COMPARTMENT AND COMPONENTS, Cam Support Plate and Cover Installation |
| Cam sprocket flange bolt, final torque | 34 ft-lbs | 46.1 Nm | 3.24 CAM COMPARTMENT AND COMPONENTS, Cam Support Plate and Cover Installation/Apply LOCTITE 262 HIGH STRENGTH THREADLOCKER AND SEALANT (red) |
| Cam sprocket flange bolt, first torque | 15 ft-lbs | 20.3 Nm | 3.24 CAM COMPARTMENT AND COMPONENTS, Cam Support Plate and Cover Installation |
| Cam support plate screws | 100-120 **in-lbs** | 11.3-13.6 Nm | 3.24 CAM COMPARTMENT AND COMPONENTS, Cam Support Plate and Cover Installation |
| Crankcase pipe plugs | 120-144 **in-lbs** | 13.6-16.3 Nm | 3.26 CRANKCASE DISASSEMBLY AND REPAIR, Pipe Plug and Oil Fittings |
| Crankcase screws, final torque | 15-19 ft-lbs | 20.3-25.8 Nm | 3.28 CRANKCASE ASSEMBLY, Crankcase Assembly |
| Crankcase screws, first torque | 120 **in-lbs** | 13.6 Nm | 3.28 CRANKCASE ASSEMBLY, Crankcase Assembly/Loosen then final tighten |
| Crankshaft sprocket bolt, final torque | 24 ft-lbs | 32.5 Nm | 3.24 CAM COMPARTMENT AND COMPONENTS, Cam Support Plate and Cover Installation |
| Crankshaft sprocket bolt, first torque | 15 ft-lbs | 20.3 Nm | 3.24 CAM COMPARTMENT AND COMPONENTS, Cam Support Plate and Cover Installation/Apply LOCTITE 262 HIGH STRENGTH THREADLOCKER AND SEALANT (red) |
| Cylinder head bolts, final torque | 90 degrees | 90 degrees | 3.23 TOP END OVERHAUL: ASSEMBLY, Cylinder Head |
| Cylinder head bolts, first torque | 120-144 **in-lbs** | 13.6-16.3 Nm | 3.23 TOP END OVERHAUL: ASSEMBLY, Cylinder Head/ See procedure to tighten |
| Cylinder head bolts, second torque | 15-17 ft-lbs | 20.3-23.0 Nm | 3.23 TOP END OVERHAUL: ASSEMBLY, Cylinder Head |
| Cylinder head bracket bolts | 35-40 ft-lbs | 47.5-54.2 Nm | 3.13 ASSEMBLING MOTORCYCLE AFTER SERVICE, Procedure |
| Cylinder head bracket bolts | 35-40 ft-lbs | 47.5-54.2 Nm | 3.15 INSTALLING ENGINE IN CHASSIS, Procedure |
| Cylinder stud | 120-240 **in-lbs** | 13.6-27.1 Nm | 3.26 CRANKCASE DISASSEMBLY AND REPAIR, Cylinder Studs |
| Cylinder torque plate bolts, final torque | 90 degrees | 90 degrees | 3.21 CYLINDER, Inspection |
| Cylinder torque plate bolts, first torque | 120-144 **in-lbs** | 13.6-16.3 Nm | 3.21 CYLINDER, Inspection/ See procedure to tighten |
| Cylinder torque plate bolts, second torque | 15-17 ft-lbs | 20.3-23.0 Nm | 3.21 CYLINDER, Inspection |
| Engine oil drain plug | 14-21 ft-lbs | 19.0-28.5 Nm | 3.29 OIL PAN, Installation/Clean plug before installation |

| FASTENER | TORQUE VALUE | | NOTES |
|---|---|---|---|
| Footpeg bracket screws | 25-35 ft-lbs | 33.9-47.5 Nm | 3.13 ASSEMBLING MOTORCYCLE AFTER SERVICE, Procedure |
| Footpeg bracket screws | 25-35 ft-lbs | 33.9-47.5 Nm | 3.15 INSTALLING ENGINE IN CHASSIS, Procedure |
| Footpeg bracket screws | 25-35 ft-lbs | 33.9-47.5 Nm | 3.15 INSTALLING ENGINE IN CHASSIS, Procedure |
| Front engine mounting bracket bolts | 25-32 ft-lbs | 33.9-43.4 Nm | 3.15 INSTALLING ENGINE IN CHASSIS, Procedure |
| Lifter cover screws | 100-120 **in-lbs** | 11.3-13.6 Nm | 3.23 TOP END OVERHAUL: ASSEMBLY, Pushrods, Lifters and Covers |
| Main bearing, right, retaining screws | 40-70 **in-lbs** | 4.5-7.9 Nm | 3.26 CRANKCASE DISASSEMBLY AND REPAIR, Right Crankcase Half/Used screws - apply LOCTITE 243 MEDIUM STRENGTH THREADLOCKER AND SEALANT (blue) |
| Oil pan screws | 132-156 **in-lbs** | 14.9-17.6 Nm | 3.29 OIL PAN, Installation |
| Oil pump screws, final torque | 90-120 **in-lbs** | 10.2-13.6 Nm | 3.24 CAM COMPARTMENT AND COMPONENTS, Cam Support Plate and Cover Installation |
| Oil pump screws, first torque | 40-45 **in-lbs** | 4.5-5.1 Nm | 3.24 CAM COMPARTMENT AND COMPONENTS, Cam Support Plate and Cover Installation |
| Piston jet screws | 25-35 **in-lbs** | 2.8-3.9 Nm | 3.26 CRANKCASE DISASSEMBLY AND REPAIR, Right Crankcase Half |
| Rocker arm support plate screws | 18-22 ft-lbs | 24.4-29.8 Nm | 3.23 TOP END OVERHAUL: ASSEMBLY, Rocker Arm Support Plate |
| Rocker cover screws | 15-18 ft-lbs | 20.3-24.4 Nm | 3.23 TOP END OVERHAUL: ASSEMBLY, Breather and Rocker Cover/Apply LOCTITE 243 MEDIUM STRENGTH THREADLOCKER AND SEALANT (blue). |
| Rocker housing screws | 120-168 **in-lbs** | 13.6-19.0 Nm | 3.23 TOP END OVERHAUL: ASSEMBLY, Cylinder Head/Apply LOCTITE 243 MEDIUM STRENGTH THREADLOCKER AND SEALANT (blue). |
| Secondary cam chain tensioner fastener | 90-120 **in-lbs** | 10.2-13.6 Nm | 3.24 CAM COMPARTMENT AND COMPONENTS, Camshafts |
| Shifter foot lever pinch bolt | 18-22 ft-lbs | 24.4-29.8 Nm | 3.15 INSTALLING ENGINE IN CHASSIS, Procedure |
| Spark plug | 12-18 ft-lbs | 16.3-24.4 Nm | 3.8 TROUBLESHOOTING, Compression Test |
| Stabilizer link bolt | 18-22 ft-lbs | 24.4-29.8 Nm | 3.13 ASSEMBLING MOTORCYCLE AFTER SERVICE, Procedure |
| Stabilizer link bolt | 18-22 ft-lbs | 24.4-29.8 Nm | 3.15 INSTALLING ENGINE IN CHASSIS, Procedure |
| Timer cover screws | 20-30 **in-lbs** | 2.3-3.4 Nm | 3.24 CAM COMPARTMENT AND COMPONENTS, Cam Support Plate and Cover Installation |
| Transmission drain plug | 14-21 ft-lbs | 19.0-28.5 Nm | 3.29 OIL PAN, Installation/Clean plug before installation |
| Transmission mounting bolts, final torque | 34-39 ft-lbs | 46.1-52.9 Nm | 3.15 INSTALLING ENGINE IN CHASSIS, Procedure |
| Transmission mounting bolts, initial torque | 15 ft-lbs | 20.3 Nm | 3.15 INSTALLING ENGINE IN CHASSIS, Procedure |

## SPECIFICATIONS

**Table 3-1. Engine: Twin Cam 96**

| ITEM | SPECIFICATION | |
|---|---|---|
| Number of cylinders | 2 | |
| Type | 4-cycle, 45 degree V-Type, air cooled | |
| Compression ratio | 9.2:1 | |
| Bore | 3.75 in | 95.3 mm |
| Stroke | 4.38 in | 111.1 mm |
| Displacement | 96.7 $in^3$ | 1585 $cm^3$ |
| Lubrication system | Pressurized, dry sump | |

**Table 3-2. Engine: Twin Cam 103**

| ITEM | SPECIFICATION | |
|---|---|---|
| Number of cylinders | 2 | |
| Type | 4-cycle, 45 degree V-Type, air-cooled | |
| Compression ratio | 9.6:1 | |
| Bore | 3.875 in | 98.42 mm |
| Stroke | 4.375 in | 111.12 mm |
| Displacement | 103.0 $in^3$ | 1690 $cm^3$ |
| Lubrication system | Pressurized, dry sump | |

**Table 3-3. Oiling System**

| ITEM | SPECIFICATION |
|---|---|
| Capacity with filter (approximate) | 3 qt (2.8 L) |
| Recommended oil | Genuine Harley-Davidson H-D 360 Motorcycle Oil |
| Type | Twin gerotor, dual scavenge, crank mounted and driven, internal oil pump, dry sump |
| Pressure | 30-38 psi (207-262 kPa) at 2000 rpm and normal operating temperature of 230 °F (110 °C) |
| Filtration | 5 micron media, filtered between pump and engine |

**Table 3-4. Rocker Arms Specifications**

| ROCKER ARMS | IN | MM |
|---|---|---|
| Shaft fit in bushing (loose) | 0.0005-0.0020 | 0.013-0.051 |
| End clearance | 0.003-0.013 | 0.08-0.33 |
| Bushing fit in rocker arm (tight) | 0.002-0.004 | 0.051-0.102 |

**Table 3-5. Rocker Arm Shaft Specifications**

| ROCKER ARM SHAFTS | IN | MM |
|---|---|---|
| Shaft fit in rocker arm support plate (loose) | 0.0007-0.0022 | 0.018-0.056 |

**Table 3-6. Hydraulic Lifter Specifications**

| HYDRAULIC LIFTERS | IN | MM |
|---|---|---|
| Fit in crankcase (loose) | 0.0009-0.0026 | 0.023-0.066 |

**Table 3-7. Cylinder Head Specifications**

| CYLINDER HEAD | IN | MM |
|---|---|---|
| Valve guide in head (tight) | 0.0022-0.0033 | 0.051-0.084 |
| Valve seat in head (tight) | 0.003-0.0045 | 0.076-0.114 |
| Valve stem protrusion (min) | 2.022 | 51.36 |
| Head gasket surface (flatness) | 0-0.006 | 0-0.152 |

**Table 3-8. Valve Specifications**

| VALVES | IN | MM |
|---|---|---|
| Exhaust: fit in guide | 0.001-0.003 | 0.0254-0.0762 |
| Intake: fit in guide | 0.001-0.003 | 0.0254-0.0762 |
| Seat width | 0.040-0.062 | 1.02-1.58 |
| Stem protrusion from cylinder head boss | 2.012-2.032 | 51.10-51.61 |

**Table 3-9. Valve Springs Specifications**

| VALVE SPRINGS | IN | MM |
|---|---|---|
| Closed | 135 lbs @ 1.850 in. | 61.2 kg @ 47.0 mm |
| Open | 312 lbs @ 1.300 in. | 141.5 kg @ 33.0 mm |
| Free length | 2.325 in. | 59.1 mm |

**Table 3-10. Piston: Twin Cam 96**

| PISTON | | IN | MM |
|---|---|---|---|
| Fit in cylinder (loose) | | 0.0014-0.0025 | 0.036-0.064 |
| Piston pin fit (loose) | | 0.0002-0.0005 | 0.005-0.013 |
| Ring end gap | Top compression | 0.010-0.020 | 0.254-0.508 |
| | 2nd compression | 0.014-0.024 | 0.356-0.610 |
| | Oil control ring | 0.010-0.050 | 0.254-1.27 |
| Ring side clearance | Top compression | 0.0012-0.0037 | 0.030-0.094 |
| | 2nd compression | 0.0012-0.0037 | 0.030-0.094 |
| | Oil control rails | 0.0031-0.0091 | 0.079-0.231 |

**Table 3-11. Piston: Twin Cam 103**

| PISTON | | IN | MM |
|---|---|---|---|
| Fit in cylinder (loose) | | 0.0014-0.0025 | 0.036-0.064 |
| Piston pin fit (loose) | | 0.0002-0.0005 | 0.005-0.013 |
| Ring end gap | Top compression | 0.012-0.022 | 0.305-0.559 |
| | 2nd compression | 0.015-0.025 | 0.381-0.635 |
| | Oil control ring | 0.010-0.050 | 0.254-1.270 |
| Ring side clearance | Top compression | 0.0012-0.0037 | 0.030-0.094 |
| | 2nd compression | 0.0012-0.0037 | 0.030-0.094 |
| | Oil control rails | 0.0031-0.0091 | 0.079-0.231 |

**Table 3-12. Connecting Rod Specifications**

| CONNECTING ROD | IN | MM |
|---|---|---|
| Piston pin fit (loose) | 0.0007-0.0012 | 0.018-0.030 |
| Side play between flywheels | greater than 0.005 | greater than 0.13 |
| Connecting rod to crankpin (loose) | 0.0004-0.0017 | 0.0102-0.0432 |

**Table 3-13. Flywheel Specifications**

| FLYWHEELS | IN | MM |
|---|---|---|
| Runout (shaft measured in case) | 0.000-0.010 | 0.0-0.254 |
| Runout (measured in truing stand) | 0.000-0.004 | 0.0-0.102 |
| End play | 0.003-0.013 | 0.076-0.330 |

**Table 3-14. Crankshaft/Sprocket Shaft Bearing Specifications**

| CRANKSHAFT/SPROCKET SHAFT BEARINGS | IN | MM |
|---|---|---|
| Roller bearing fit (loose) | 0.0002-0.0015 | 0.005-0.038 |
| Bearing fit in crankcase (tight) | 0.0038-0.0054 | 0.097-0.137 |
| Bearing inner race on crankshaft (tight) | 0.0004-0.0014 | 0.010-0.036 |

## GENERAL

Wear limits are given here as a guideline for measuring used engine components. Replace components when they exceed values listed here.

**Table 3-15. Rocker Arm/Rocker Arm Shaft**

| ROCKER ARM/ROCKER ARM SHAFT | REPLACE IF WEAR EXCEEDS | |
|---|---|---|
| | IN | MM |
| Shaft fit in bushing (loose) | 0.0035 | 0.089 |
| End clearance | 0.025 | 0.635 |
| Shaft fit in rocker arm support (loose) | 0.0035 | 0.089 |

**Table 3-16. Hydraulic Lifter**

| HYDRAULIC LIFTER | REPLACE IF WEAR EXCEEDS | |
|---|---|---|
| | IN | MM |
| Fit in crankcase | 0.006 | 0.152 |
| Roller fit | 0.0015 | 0.038 |
| Roller end clearance | 0.022 | 0.559 |

**Table 3-17. Cam Support Plate**

| ITEM | REPLACE IF WEAR EXCEEDS | |
|---|---|---|
| | IN | MM |
| Cam chain tensioner shoe thickness | 0.060 min. | 1.52 min. |
| Crankshaft bore maximum ID | 0.8545 | 21.704 |
| Camshaft bore | 1.1023 | 27.998 |
| Flatness | 0.010 | 0.25 |

**Table 3-18. Oil Pump**

| OIL PUMP | REPLACE IF WEAR EXCEEDS | |
|---|---|---|
| | IN | MM |
| Rotor tip clearance | 0.004 | 0.10 |
| Rotor thickness variation | 0.001 | 0.025 |
| Rotor protrusion (pump assembled) | 0.015-0.025 | 0.38-0.64 |

**Table 3-19. Cylinder Head**

| CYLINDER HEAD | REPLACE IF | |
|---|---|---|
| | IN | MM |
| Valve guide press fit in head | Less than 0.002 | Less than 0.05 |
| Valve seat press fit in head | Less than 0.002 | Less than 0.05 |
| Valve seat width (max) | 0.062 | 1.57 |
| Valve margin (min) | 0.031 | 0.80 |
| Valve stem protrusion (max) | 2.069 | 52.55 |
| Head warpage (max) | 0.006 | 0.15 |

**Table 3-20. Cylinder**

| CYLINDER | REPLACE IF WEAR EXCEEDS | |
|---|---|---|
| | IN | MM |
| Taper | 0.002 | 0.051 |
| Out of round | 0.002 | 0.051 |
| Warpage of gasket surfaces: top | 0.006 | 0.152 |
| Warpage of gasket or O-ring surfaces: base | 0.004 | 0.102 |

**Table 3-21. Cylinder Bore: Twin Cam 96**

| CYLINDER BORE | REPLACE IF WEAR EXCEEDS | |
|---|---|---|
| | IN | MM |
| Standard | 3.752 | 95.301 |
| 0.005 in oversize | 3.757 | 95.428 |
| 0.010 in oversize | 3.762 | 95.555 |

Table 3-22. Cylinder Bore: Twin Cam 103

| ITEM | REPLACE IF WEAR EXCEEDS | |
|---|---|---|
| | IN | MM |
| Standard | 3.877 | 98.48 |
| 0.005 in oversize | 3.882 | 98.60 |
| 0.010 in oversize | 3.887 | 98.73 |

Table 3-23. Piston

| PISTON | | REPLACE IF WEAR EXCEEDS | |
|---|---|---|---|
| | | IN | MM |
| Fit in cylinder (loose) | | 0.003 | 0.076 |
| Piston pin fit (loose) | | 0.0008 | 0.020 |
| Ring end gap | Top compression | 0.030 | 0.762 |
| | Second compression | 0.034 | 0.864 |
| | Oil control rails | 0.050 | 1.27 |
| Ring side clearance | Top compression | 0.0045 | 0.114 |
| | Second compression | 0.0045 | 0.114 |
| | Oil control rails | 0.010 | 0.254 |

Table 3-24. Connecting Rod

| CONNECTING ROD | REPLACE IF WEAR EXCEEDS | |
|---|---|---|
| | IN | MM |
| Piston pin fit (loose) | 0.002 | 0.051 |
| Fit on crankpin (loose) | 0.002 | 0.051 |

Table 3-25. Breather Assembly

| BREATHER ASSEMBLY | REPLACE IF WEAR EXCEEDS | |
|---|---|---|
| | IN | MM |
| Breather cover warpage | 0.005 | 0.13 |
| Breather baffle warpage | 0.005 | 0.13 |

Table 3-26. Valve Stem to Guide

| VALVE STEM TO GUIDE | REPLACE IF WEAR EXCEEDS | |
|---|---|---|
| | IN | MM |
| Intake | 0.0038 | 0.0965 |
| Exhaust | 0.0038 | 0.0965 |

Table 3-27. Flywheel

| FLYWHEEL | REPLACE IF WEAR EXCEEDS | |
|---|---|---|
| | IN | MM |
| Runout (shaft measured in case) | 0.012 | 0.305 |
| Runout (measured in truing stand) | 0.005 | 0.127 |
| End play | 0.013 | 0.330 |

Table 3-28. Crankshaft Roller Bearing

| CRANKSHAFT ROLLER BEARING | REPLACE IF | |
|---|---|---|
| | IN | MM |
| Roller bearing fit (loose) | More than 0.0015 | More than 0.038 |
| Bearing fit in crankcase (tight) | Less than 0.0038 | Less than 0.097 |
| Inner race on crankshaft (tight) | Less than 0.0004 | Less than 0.010 |

## OIL FEED

*NOTE*

*The oiling system is carefully designed for optimum efficiency. All oil holes and passageways are specially sized. Avoid enlarging oil holes during cleaning. Any modification of the oiling system will adversely affect oil pressure or cooling and lubrication efficiency.*

Two illustrations accompany this explanation.

- Cam support plate oil flow is shown in Figure 3-1.
- Top end oil flow is shown in Figure 3-2.

Oil flows from the oil pan through an internal passageway at the front of the transmission housing, and enters the lower passageway (A1) cast into the rear right side of the crankcase.

Oil exits a hole in the crankcase flange (B2). It then enters a hole on the inboard side of the cam support plate. Passing through a channel in the cam support plate (A3), oil enters the feed side of the oil pump. See 3.5 OIL PUMP OPERATION. The feed gerotors of the pump direct the flow up a second channel in the cam support plate (A4).

A passage in this channel connects to a pressure relief valve mounted in the bypass port of the cam support plate (A5). When the oil pressure exceeds the setting of the relief valve spring 35 psi (241.3 kPa), the orifice opens to bypass excess oil back to the feed side of the pump (A3).

Oil not returned to the oil pump feed side exits a hole on the inboard side of the cam support plate. Oil then flows through a hole in the crankcase flange (B6). Oil flows through a passageway in the crankcase and exits the lower off-center hole in the oil filter mount (D8). The oil pressure sending unit (B7) is also connected to this passage.

After circulating through the oil filter, the flow is directed back into the crankcase through the center hole in the oil filter mount (D9). Exiting a passageway in the crankcase through a hole in the crankcase flange (B10), the flow of oil reenters the cam support plate.

Filtered oil is then routed to the top and bottom ends of the engine as described in 3.4 ENGINE OIL FLOW, Top End and 3.4 ENGINE OIL FLOW, Bottom End which follow.

## TOP END

Two illustrations accompany this explanation.

- Cam support plate oil flow is shown in Figure 3-1.
- Top end oil flow is shown in Figure 3-2.

Oil passes through a channel in the cam support plate. It exits on the crankcase side through two holes near the top (A11, A12). Oil enters two holes in the crankcase flange (B13, B14). One passage leads to the front cylinder and the other to the rear cylinder. Oil then travels through passageways in the crankcase to the hydraulic lifter bores (D15).

Oil enters each lifter bore through oblong holes (E16), flows around the lifter and enters a hole at the side of the lifter body. As the chamber inside the lifter body is filled, the pushrod socket rises to eliminate lash of the valve train components. Oil then exits a hole centered in the lifter socket and flows up the hollow pushrods.

*NOTE*

*An additional round hole (E17) drilled into the lifter bores feeds oil to the piston jets.*

Exiting holes at the top of the pushrods, oil enters the rocker arms lubricating the rocker arm bushings. Oil flows along the rocker arm shafts and exits a pin hole in the outboard side of each rocker arm (F18). This oil lubricates the valve springs and the top of the valve stem.

Oil runs to the low side of the rocker housing and enters the exhaust valve spring pocket. A drain hole (G19) leads to a passageway in the cylinder head casting.

Oil exits the bottom of the cylinder head and passes through a dowel pin (H20) on the cylinder flange. Oil flows through a vertical passageway in the cylinder. It then passes through a second dowel pin on the cylinder deck (I21) and enters the left crankcase half.

Flowing through a horizontal passageway in the left crankcase half (J22), oil runs through a third dowel pin (K23) to the right crankcase half. Finally it travels through another passageway before emptying into the cam compartment (B23, B24).

Oil collecting in the cam compartment is picked up by one of two scavenge lobes on the oil pump (B25).

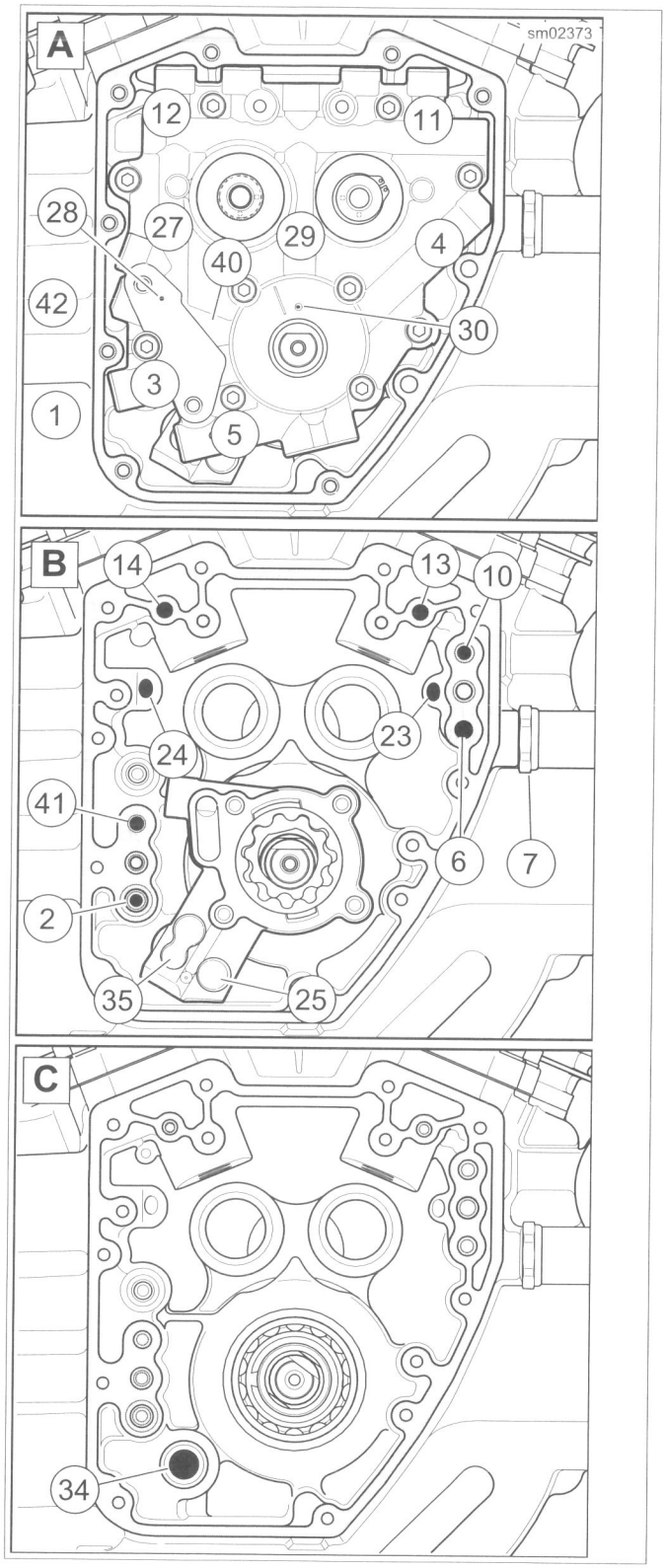


**Figure 3-1. Engine Oil Flow: Cam Support Plate and Right Crankcase Half**

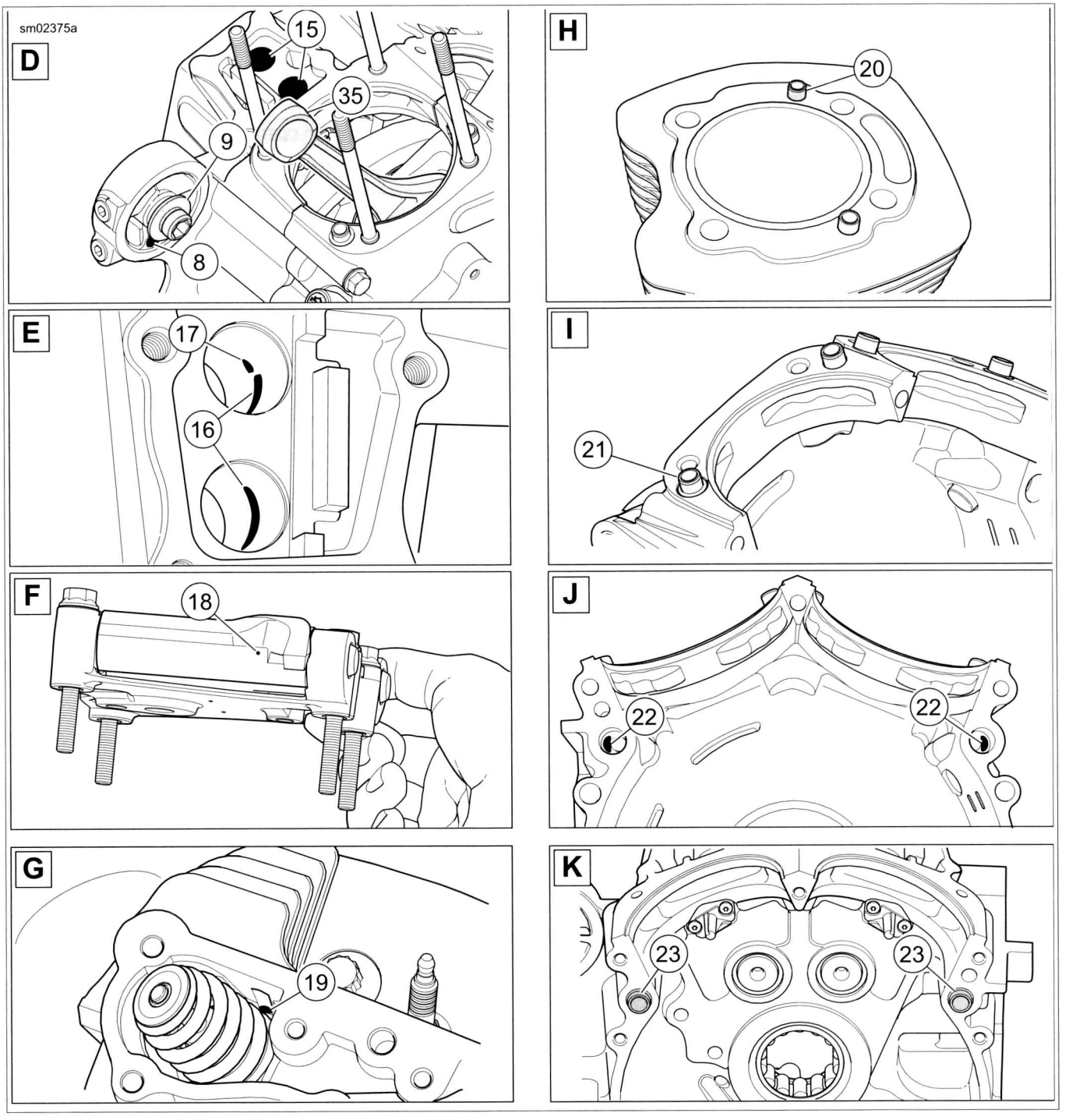


**Figure 3-2. Engine Oil Flow: Top End**

## BOTTOM END

Three illustrations accompany this explanation.

- Cam support plate oil flow is shown in Figure 3-1.
- Top end oil flow is shown in Figure 3-2.
- Bottom end oil flow is shown in Figure 3-3.

Oil traveling through the horizontal passage (A11-A12) at the top of the cam support plate (en route to the cylinders) also passes through a hole at the top of each camshaft bore. This oil lubricates the journals of the plain bearing cams. Some oil flowing to the rear cylinder sprays through a pin hole to lubricate the secondary cam chain.

Oil to the rear cylinder also travels down the vertical passage (A27) at the rear of the cam support plate. This oil exits a hole on the outboard side to supply oil to the primary cam chain tensioner (A28).

The flow of oil in the vertical passage (A29) at the center of the cam support plate passes through a hole on the inboard side. This supplies oil to the secondary cam chain tensioner. Oil also sprays through a pin hole (A30) to lubricate the primary cam chain. Oil then flows through a hole in the crankshaft bushing where it enters a passage in the crankshaft (L31).

Oil flows through the center of the crankshaft and through a cross passage into the right side of the flywheel. Oil enters the

crank pin and exits through three holes to lubricate the lower rod bearing set.

Oil splash and mist created by flywheel rotation lubricates the crankshaft and the camshaft bearings in the right crankcase half. This same action serves to lubricate the sprocket shaft bearing in the left crankcase half (M32).

Since the oil mist also lubricates the cylinder walls, three holes on each side of the piston (in the area of the third ring land) evacuate excess oil scraped from the walls on the piston downstroke.

The piston jets (N33) receive oil from the intake lifter bores. They spray the underside of the piston for cooling of the piston crown and skirt area. A check valve in each jet opens only when the oil pressure reaches 12-18 psi (82.7-124.1 kPa), at which point the engine is operating above idle speed. Oil pressure at idle speeds will be 9-12 psi (62.1-82.7 kPa). At this pressure the valve remains closed to prevent over oiling and to provide proper system operating pressure.

Oil spray from each piston jet also sprays the bottom of each pin boss (O34) to lubricate the piston pin. The spray also allows a portion of the oil to reach the upper rod bushing (D35).

Surplus oil falls back to the bottom of the flywheel compartment where it collects in the sump area (P36). Oil in the sump is drawn to the scavenge side of the oil pump (B35) through an internal channel (P37, C34).

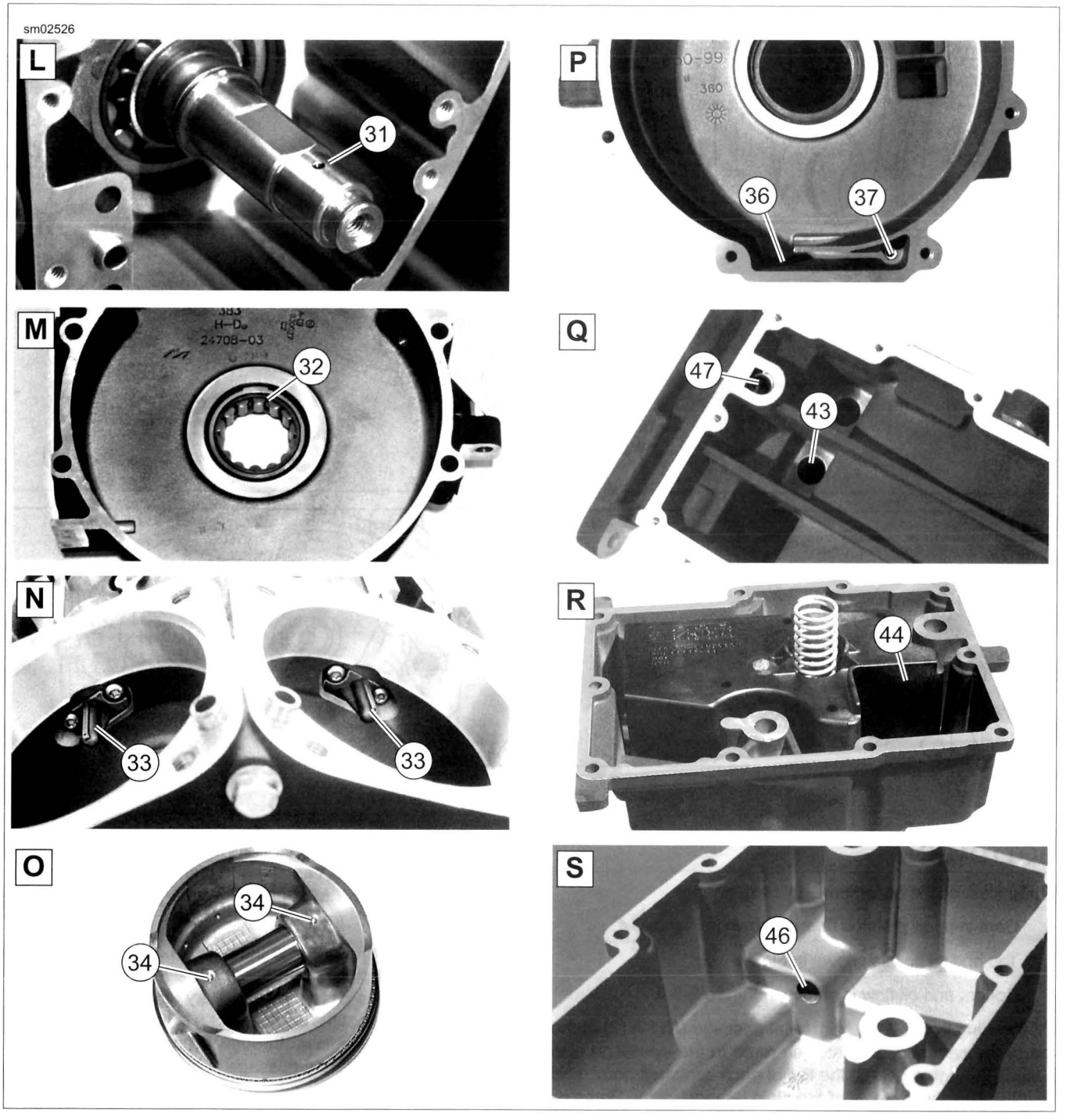


**Figure 3-3. Engine Oil Flow-Bottom End**

## OIL RETURN

Two illustrations accompany this explanation.

- Cam support plate oil flow is shown in Figure 3-1.
- Bottom end oil flow is shown in Figure 3-3.

The "dual kidney" designation given to the oil pump refers to its two scavenging functions, whereby it simultaneously draws oil from both the cam and flywheel compartments.

Oil sucked up by the scavenge lobes passes through the scavenge gerotors of the oil pump and is directed through a return channel in the cam support plate (A40). See 3.5 OIL PUMP OPERATION.

Exiting a hole on the inboard side of the cam support plate,the oil enters the upper hole in the crankcase flange (B41).

The oil flows through the upper passageway in the crankcase (A42), enters a passageway at the front of the transmission housing and empties into the oil pan at the front of the baffle (Q43, R44).

The oil flows to the rear of the oil pan along each side of the baffle. Spring tension holds the unit tight against the bottom of the pan to prevent oil from entering or escaping around the perimeter of the baffle. At the back of the oil pan, the oil enters the open side of the baffle where it is redirected for-ward. The baffle plates slow the circulation of the oil through the pan to enhance cooling.

Oil pickup occurs in the front compartment of the baffle where a passageway in the casting (S46) directs the flow upward. Passing through a second passageway in the trans-mission housing (Q47), the flow of oil enters the lower passageway in the crankcase (A1) to repeat the circuit.

## GENERAL

See Figure 3-4. The oil pump has two gerotor gear sets driven by the crankshaft.

- The feed gerotor set distributes oil to the engine.
- The scavenge gerotor set draws oil from the cam and flywheel compartments and returns it to the oil pan.

Each gerotor gear set has an inner and outer gerotor. The inner and outer gerotors have fixed centers that are slightly offset to one another. Also, the inner gerotor has one less tooth.

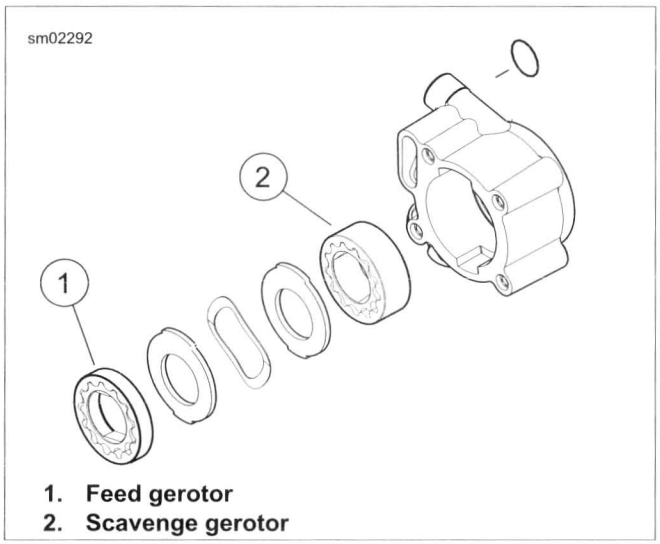


1. **Feed gerotor**
2. **Scavenge gerotor**

**Figure 3-4. Oil Pump Gerotors**

## OPERATION

The oil pump is driven by the crankshaft. The inlet and outlet sides of the pump are sealed by the tips and lobes of the inner and outer gerotors. This prevents oil on the outlet side (high pressure) from being transferred to the inlet side.

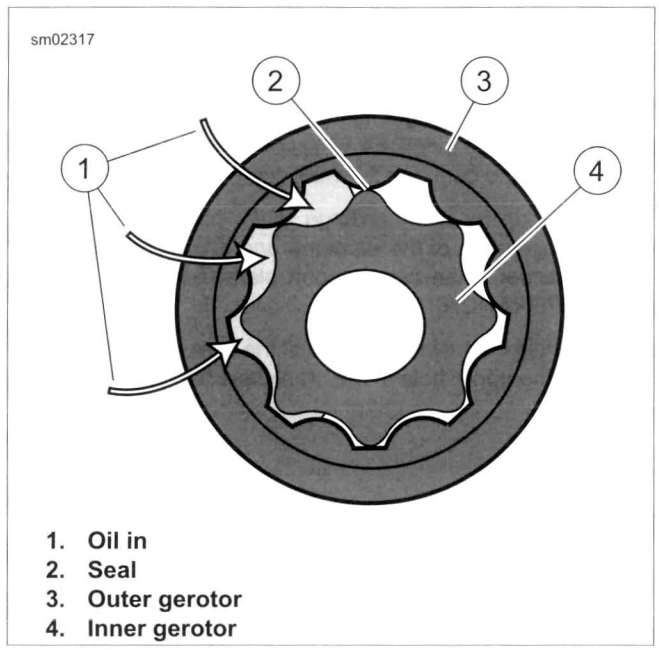


1. **Oil in**
2. **Seal**
3. **Outer gerotor**
4. **Inner gerotor**

**Figure 3-5. Inlet Side Oil Flow**

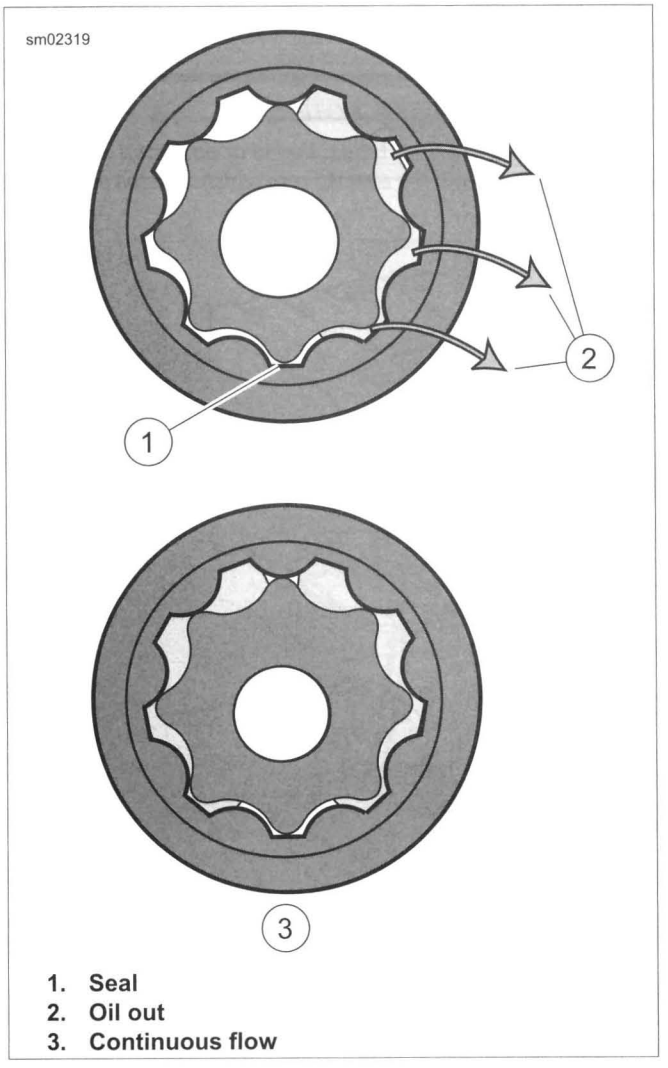


1. **Seal**
2. **Oil out**
3. **Continuous flow**

**Figure 3-6. Outlet Side Oil Flow**

See Figure 3-5. As the gerotors rotate, the cavity volume increases between the inner and outer gerotors on the inlet side of the pump. This creates a vacuum causing oil to be drawn in. The cavity increases until the volume is equivalent to that of the missing tooth on the inner gerotor.

See Figure 3-6. As the oil moves to the outlet side of the pump, the cavity decreases in volume. This forces pressurized oil out the discharge port. In operation, the gerotors provide a continuous flow of oil.

## GENERAL

The crankcase breather system relieves crankcase pressure produced by the downstroke of the pistons. Crankcase vapors are then directed into the intake air stream to be burned during normal combustion. Burning crankcase vapors eliminates the pollutants normally discharged from the crankcase.

See Figure 3-7. As pistons push downward, displaced air in the crankcase is vented through the crankshaft roller bearing into the cam compartment. The air then flows up the pushrod covers (1) into the rocker housing. The moving air absorbs a small amount if oil vapor as it travels through the engine.

The oil/air vapor rushes under the rocker arm support plate and passes through an opening at the bottom of the plate to enter the breather baffle compartment (2).

In the baffle compartment, the flow of air passes upward through the oil filter gauze, where the oil is removed from the air. Two pin holes in the rocker arm support plate allow the separated oil to drain back into the crankcase.

Passing through the oil filter gauze, the vapor passes through the umbrella valve (3) into the breather compartment. The umbrella valve only allows air to be vented one way.

In the breather compartment, air flows downward through holes aligned in the breather baffle, rocker arm support plate and rocker housing. Exiting the rocker housing, air enters a passageway cast into the top of the cylinder head. Proper orientation of the rocker housing gasket is critical for effective sealing of this passageway.

Air flows through the cylinder head passageway and through a passage in the air cleaner backplate bolt (4). It passes through a breather tube (5) into the air filter element. It then joins with the intake air stream and is burned during normal combustion.

*NOTE*

*Always connect breather tubes. Loose or detached tubes vent crankcase gases into the atmosphere which violates emissions standards.*

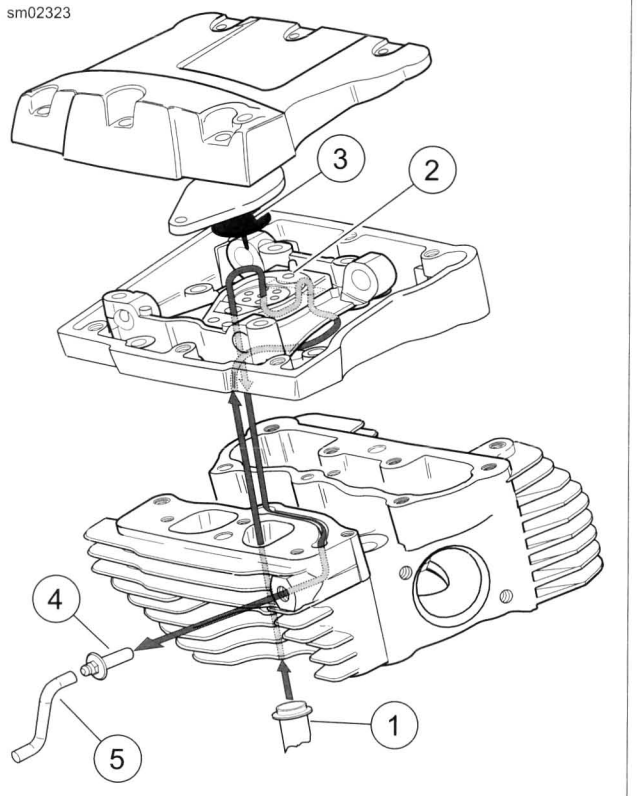


1. **Pushrod cover**
2. **Breather baffle compartment**
3. **Umbrella valve**
4. **Air cleaner backplate bolt**
5. **Breather tube**

**Figure 3-7. Breather Air Flow**

## OIL PRESSURE INDICATOR LAMP

See Figure 3-8. The red OIL PRESSURE indicator lamp illuminates to indicate improper pressure of the engine oil. The lamp illuminates when the ignition is initially turned on (before the engine is started), but should extinguish once the engine is running.

***NOTICE***

**If the oil pressure indicator lamp remains lit, always check the oil supply first. If the oil supply is normal and the lamp is still lit, stop the engine at once and do not ride further until the trouble is located and the necessary repairs are made. Failure to do so may result in engine damage. (00157a)**

If the indicator lamp does not extinguish, it may be caused by low oil level or diluted oil supply. In freezing weather, the oil feed and return lines can clog with ice or sludge. Other conditions that may cause the lamp to remain lit are:

- Faulty lamp wiring
- Faulty oil pressure sending unit
- Damaged oil pump
- Plugged oil filter element
- Incorrect oil viscosity for the operating temperature
- Fractured or weak spring in the oil pressure relief valve
- Incorrectly installed O-rings in the engine

To troubleshoot the problem, always check the engine oil level first. If the oil level is OK, determine if oil returns to the oil pan. If oil does not return, shut off the engine until the problem is located and corrected.

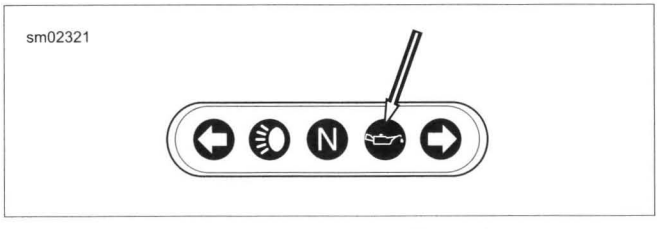


**Figure 3-8. Oil Pressure Indicator Lamp**

## CHECKING OIL PRESSURE

| PART NUMBER | TOOL NAME |
|---|---|
| HD-96921-52D | OIL PRESSURE GAUGE SET |

1. Verify that engine oil is at the proper level. See 1.5 ENGINE OIL AND FILTER.
2. Ride motorcycle until engine oil is at normal operating temperature.
3. See Figure 3-9. Remove oil pressure switch from crankcase. See 7.28 OIL PRESSURE SWITCH.
4. See Figure 3-10. Install OIL PRESSURE GAUGE SET (Part No. HD-96921-52D).
   a. Hand-tighten adapter (2) in oil pressure switch mounting hole.
   b. Assemble banjo bolt (3), washer (4), oil pressure gauge (1), banjo fitting and second washer onto adapter. Hand-tighten.

*NOTE*

*Engine oil should be at normal operating temperature, 230 °F (110 °C), for an accurate reading.*

5. Verify that oil pressure is within specifications. Refer to Table 3-29.
6. See 3.8 TROUBLESHOOTING if readings are not within specification.
7. Stop engine. Remove oil pressure gauge assembly.
8. Install oil pressure switch. See 7.28 OIL PRESSURE SWITCH.

**Table 3-29. Oil Pressure**

| CHECK | SPECIFICATION * | |
|---|---|---|
| | SAE | METRIC |
| Oil pressure - min at idle | 5 psi | 34.5 kPa |
| Oil pressure - normal at 2000 rpm | 30-38 psi | 207-262 kPa |
| Oil pressure - max | 50 psi | 345 kPa |
| * With oil at normal operating temperature of 230 °F (110 °C) | | |

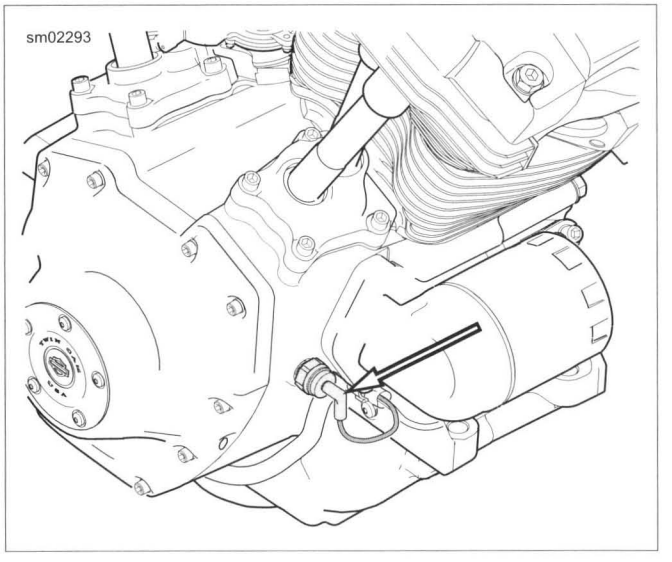


**Figure 3-9. Oil Pressure Switch**

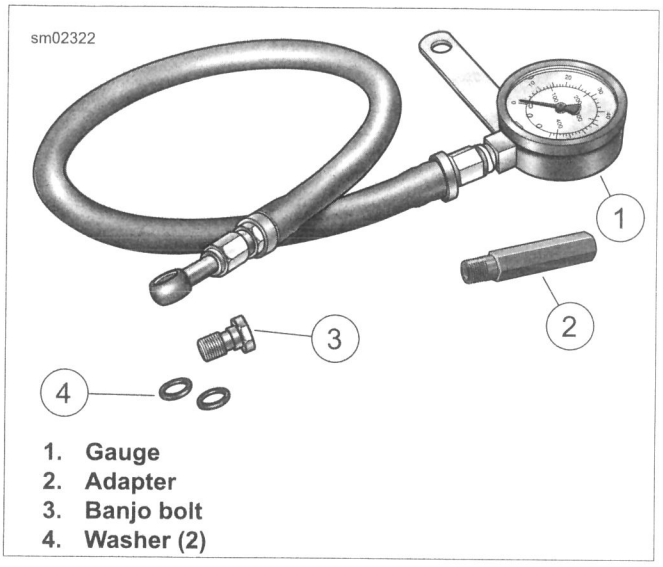


1. Gauge
2. Adapter
3. Banjo bolt
4. Washer (2)

Figure 3-10. Oil Pressure Gauge Set

## DIAGNOSING VALVE TRAIN NOISE

*NOTE*

*When starting an engine which has been turned off even for a few minutes, the valve mechanism may be slightly noisy until the hydraulic lifters completely refill with oil. If the valve mechanism becomes abnormally noisy, other than for a short period immediately after engine is started, it may indicate that one or more of the hydraulic lifters is not functioning properly.*

1. With engine and oil at normal operating temperature, check oil pressure at 2000 rpm. If oil pressure is above 50 psi (345 kPa) or below 5 psi (34 kPa), inspect the following for restrictions or blockage:
   a. Oil pump
   b. Crankcase passages
   c. Oil hoses
2. Replace or repair as necessary.
3. If oil not reaching the hydraulic lifters is suspected, remove lifters and inspect. See 3.19 PUSHRODS, LIFTERS AND COVERS, Inspect Lifters. Clean lifter bore of all foreign material. Replace hydraulic lifter if necessary.
4. Inspect pushrod, lifter and lifter bore for proper fit and unusual wear. Replace or repair as necessary.
5. Visually inspect camshaft lobes for abnormal wear.
6. Check cam chain tensioning shoe for wear.
7. Check top end components.
   a. Remove rocker box assemblies and cylinder heads.
   b. Check rocker arm for excess end play or binding.
   c. Inspect valve stems for scuffing and check stem to guide clearance.
   d. Check valve seats for signs of looseness or shifting.
8. Grind valves and valve seats. See 3.20 CYLINDER HEAD, Valve and Seat Refacing.

## COMPRESSION TEST

| PART NUMBER | TOOL NAME |
|---|---|
| HD-33223-1 | CYLINDER COMPRESSION GAUGE |

| FASTENER | TORQUE VALUE | |
|---|---|---|
| Spark plug | 12-18 ft-lbs | 16.3-24.4 Nm |

Check for cylinder leakage with a compression test. Use CYLINDER COMPRESSION GAUGE (Part No. HD-33223-1) with a screw-in type adapter.

*NOTE*

*All Twin Cam engines use a 12 mm adapter with the compression gauge.*

1. Run motorcycle until engine is at normal operating temperature.
2. Disconnect spark plug wires, clean around plug base. Remove spark plugs.
3. Remove air cleaner. See 4.3 AIR CLEANER ASSEMBLY.
4. Connect compression tester to front cylinder per manufacturer's instructions.
5. Verify transmission is in NEUTRAL. Hold throttle at wide open throttle position and crank engine continuously through 5-7 full compression strokes. Note gauge readings at the end of the first and last compression strokes. Record test results.
6. **ACR models:** Disconnect the ACR. Repeat the test.
7. Repeat tests on rear cylinder.
8. Clear DTC codes when test is complete.

*NOTE*

*Verify that throttle is closed before assembling air cleaner.*

9. Install air cleaner. See 4.3 AIR CLEANER ASSEMBLY.
10. Refer to Table 3-30. Normal readings are within specifications and do not indicate more than a 10 percent variance between cylinders.
11. If readings do not meet specifications:
    a. Disconnect ACRs.
    b. Inject approximately 1/2 oz. (15 ml) engine oil into each cylinder.
    c. Repeat the compression tests on both cylinders.
    d. Readings that are considerably higher during the second test indicate worn piston rings.

    If worn piston rings are not suspected, refer to Table 3-31 for possible causes.
12. Install the spark plugs. Tighten to 12-18 ft-lbs (16.3-24.4 Nm). Connect spark plug wires.

**Table 3-30. Compression Specifications**

| ACR STATUS | PSI | kPa |
|---|---|---|
| Engines without ACR | 125 (min) | 862 (min) |
| ACR connected | 110 (min) | 758 (min) |
| ACR disconnected | 175 (min) | 1207 (min) |

*NOTE*

*The following conditions assume the ACRs are disconnected and closed.*

Table 3-31. Compression Test Results

| DIAGNOSIS | TEST RESULTS |
|---|---|
| Ring trouble | Compression low on first stroke, tends to build up on the following strokes, but does not reach normal. Improves considerably when oil is added to cylinder. |
| Valve trouble | Compression low on first stroke, does not build up much on following strokes. Does not improve considerably with the addition of oil. Check for correct pushrod length. |
| Head gasket leak | Same reaction as valve trouble. |

## CYLINDER LEAKDOWN TEST

| PART NUMBER | TOOL NAME |
|---|---|
| HD-35667-A | CYLINDER LEAKDOWN TESTER |

*NOTE*

*On vehicles with automatic compression release (ACR), verify the ACRs are closed for this test. Perform the test with the ignition switch turned OFF.*

The cylinder leakdown test helps pinpoint leaking valves, worn, damaged or stuck piston rings and blown head gaskets. The cylinder leakage tester applies compressed air to the cylinder at a controlled pressure and volume. It then measures the percent of leakage from the cylinder.

Use the CYLINDER LEAKDOWN TESTER (Part No. HD-35667-A). Follow the specific instructions supplied with the tester.

1. Before performing the cylinder leakdown test, verify the tester itself is free from leakage.
   a. Apply a soap solution around all tester fittings.
   b. Connect cylinder leakdown tester to compressed air source.
   c. Look for any bubbles that indicate leakage from the tester.
2. Run motorcycle until engine is at normal operating temperature. Stop engine.
3. Clean around spark plug base. Remove spark plugs.
4. Rotate crankshaft until piston in the cylinder being tested is at top dead center (TDC) of compression stroke (both valves closed).
5. Engage transmission in highest gear and lock the rear brake. This prevents the engine from turning over when air pressure is applied to the cylinder.
6. Following the manufacturer's instructions, perform a cylinder leakdown test on the front cylinder. Make a note of the percent of leakage. Leakage greater than 10 percent indicates internal engine problems.
7. Listen for air leaks at throttle body, exhaust pipe and head gasket. Air escaping through the throttle body indicates a leaking intake valve. Air escaping through the exhaust pipe indicates a leaking exhaust valve.

*NOTE*

*If air is escaping through valves, verify that piston is still at TDC or check for correct pushrod length.*

8. Repeat procedure on rear cylinder.

## DIAGNOSING SMOKING ENGINE OR HIGH OIL CONSUMPTION

Perform both a compression test and a cylinder leakage test. See 3.8 TROUBLESHOOTING, Compression Test and 3.8 TROUBLESHOOTING, Cylinder Leakdown Test. If further testing is needed, inspect for the following:

### Check Before Cylinder Head Removal:

1. Oil level too high
2. Oil carryover
3. Breather hose restricted
4. Restricted oil filter

### Check After Cylinder Head Removal:

1. Oil return passages for clogging
2. Valve guide seals
3. Valve guide to valve stem clearance
4. Gasket surface of both head and cylinder
5. Cylinder head casting porosity allowing oil to drain into combustion chamber
6. O-ring damaged or missing from oil pump/crankcase junction
7. If the above checks do not reveal the cause, remove the cylinder to inspect for excess piston ring wear. Also verify that the piston ring gaps are properly staggered.

## TOP END REPAIR

*NOTE*

*During top end disassembly, the engine may be left in the chassis for service.*

If servicing only cylinder head components, pistons or cylinders, two options are available depending on engine status.

- 3.10 TOP END SERVICE, Engine in Chassis.
- 3.10 TOP END SERVICE, Engine Removed from Chassis.

## BOTTOM END REPAIR

*NOTE*

*Servicing components in the cam compartment requires only partial disassembly. This can be done with the engine left in the chassis.*

After disassembling to the cylinder heads, it might become evident that bottom end repair is necessary. Bottom end service requires either partial or complete disassembly of the engine.

- To service the cam compartment, see 3.24 CAM COMPARTMENT AND COMPONENTS.
- To service components in the flywheel compartment, the engine must be removed and the crankcase halves separated. See 3.11 CAM COMPARTMENT SERVICE, Engine Removed From Chassis.

## TYPICAL SYMPTOMS

Symptoms indicating a need for engine repair are often misleading. If more than one symptom is present, possible causes can be narrowed to make at least a partial diagnosis.

For example, an above normal consumption of oil could be caused by several mechanical faults. However when accompanied by blue-gray smoke from the exhaust and low compression, it indicates the rings need replacing. Low compression by itself is more likely to be caused by improperly seated or burned valves, not worn rings.

Certain knocking noises may occur because of loose bearings, others by piston slap. Piston slap is a condition where piston or cylinder or both are out of tolerance. This excessive clearance allows the piston to slap the cylinder as it moves up and down.

Most frequently, valves, rings, pins, bushings and bearings need attention at about the same time. If the symptoms indicate that any one of the above components is worn, service all related parts.

## ENGINE IN CHASSIS

**Table 3-32. Engine In Chassis**

| SERVICE PROCEDURE | | COMPONENT REPAIR PROCEDURE |
|---|---|---|
| Remove parts to gain access to all components above cylinder deck. See 3.12 STRIPPING MOTORCYCLE FOR SERVICE. | | |
| Disassemble top end. See 3.16 TOP END OVERHAUL: DISASSEMBLY. | | |
| | BREATHER ASSEMBLY | Inspect and repair. See 3.17 BREATHER ASSEMBLY*. |
| | ROCKER ARM SUPPORT | Inspect and repair. See 3.18 ROCKER ARM SUPPORT PLATE*. |
| | PUSHRODS, LIFTERS AND COVERS | Inspect and repair. See 3.19 PUSHRODS, LIFTERS AND COVERS*. |
| | CYLINDER HEAD | Inspect and repair. See 3.20 CYLINDER HEAD*. |
| | CYLINDER | Inspect and repair. See 3.21 CYLINDER*. |
| | PISTON | Inspect and repair. See 3.22 PISTON*. |
| Assemble top end. See 3.23 TOP END OVERHAUL: ASSEMBLY. | | |
| Assemble motorcycle. See 3.13 ASSEMBLING MOTORCYCLE AFTER SERVICE. | | |
| Note: * If no other work is to be done, advance to 3.23 TOP END OVERHAUL: ASSEMBLY when this step is completed during top end service. | | |

## ENGINE REMOVED FROM CHASSIS

**Table 3-33. Engine Removed From Chassis**

| SERVICE PROCEDURE | | COMPONENT REPAIR PROCEDURE |
|---|---|---|
| Remove engine from motorcycle. See 3.14 REMOVING ENGINE FROM CHASSIS. | | |
| Disassemble top end. See 3.16 TOP END OVERHAUL: DISASSEMBLY. | | |
| | BREATHER ASSEMBLY | Inspect and repair. See 3.17 BREATHER ASSEMBLY*. |
| | ROCKER ARM SUPPORT | Inspect and repair. See 3.18 ROCKER ARM SUPPORT PLATE*. |
| | PUSHRODS, LIFTERS AND COVERS | Inspect and repair. See 3.19 PUSHRODS, LIFTERS AND COVERS*. |
| | CYLINDER HEAD | Inspect and repair. See 3.20 CYLINDER HEAD*. |
| | CYLINDER | Inspect and repair. See 3.21 CYLINDER*. |
| | PISTON | Inspect and repair. See 3.22 PISTON. |
| Assemble top end. See 3.23 TOP END OVERHAUL: ASSEMBLY. | | |
| Install engine in motorcycle. See 3.15 INSTALLING ENGINE IN CHASSIS. | | |
| Note: * If no other work is to be done, advance to 3.23 TOP END OVERHAUL: ASSEMBLY when this step is completed during top end service. | | |

## REPLACE CAMSHAFT

**Table 3-34. Engine In Chassis: Cam Compartment Service**

| SERVICE PROCEDURE | | COMPONENT REPAIR PROCEDURES |
|---|---|---|
| Remove parts to gain access to all components above cylinder deck. See 3.12 STRIPPING MOTORCYCLE FOR SERVICE. | | |
| Disassemble top end. See 3.16 TOP END OVERHAUL: DISASSEMBLY. | | |
| | BREATHER ASSEMBLY. | Inspect and repair. See 3.17 BREATHER ASSEMBLY. |
| | ROCKER ARM SUPPORT PLATE. | Inspect and repair. See 3.18 ROCKER ARM SUPPORT PLATE. |
| | PUSHRODS, LIFTERS AND COVERS. | Inspect and repair. See 3.19 PUSHRODS, LIFTERS AND COVERS. |
| Disassemble bottom end. See 3.24 CAM COMPARTMENT AND COMPONENTS. | | |
| | COVER AND CAM SUPPORT PLATE | Inspect and repair. See 3.24 CAM COMPARTMENT AND COMPONENTS*. |
| | OIL PUMP | Inspect and repair. See 3.25 OIL PUMP. |
| Assemble bottom end. See 3.24 CAM COMPARTMENT AND COMPONENTS. | | |
| Assemble motorcycle. See 3.13 ASSEMBLING MOTORCYCLE AFTER SERVICE. | | |
| Note: * If no other work is to be done, advance to 3.28 CRANKCASE ASSEMBLY when this step is completed during bottom end service. | | |

**Table 3-35. Engine Removed: Flywheel Compartment Service or Complete Engine Overhaul**

| SERVICE PROCEDURE | | COMPONENT REPAIR PROCEDURES |
|---|---|---|
| Remove engine from motorcycle. See 3.14 REMOVING ENGINE FROM CHASSIS. | | |
| Disassemble top end. See 3.16 TOP END OVERHAUL: DISASSEMBLY. | | |
| | BREATHER ASSEMBLY | Inspect and repair.<br>See 3.17 BREATHER ASSEMBLY. |
| | ROCKER ARM SUPPORT PLATE | Inspect and repair.<br>See 3.18 ROCKER ARM SUPPORT PLATE. |
| | PUSHRODS, LIFTERS AND COVERS | Inspect and repair.<br>See 3.19 PUSHRODS, LIFTERS AND COVERS. |
| | CYLINDER HEAD | Inspect and repair.<br>See 3.20 CYLINDER HEAD. |
| | CYLINDER | Inspect and repair.<br>See 3.21 CYLINDER. |
| | PISTON | Inspect and repair.<br>See 3.22 PISTON. |
| Disassemble bottom end. | | |
| | COVER AND CAM SUPPORT PLATE | Inspect and repair.<br>See 3.24 CAM COMPARTMENT AND COMPONENTS. |
| | CRANKCASE | Inspect crankcase and repair.<br>See 3.26 CRANKCASE DISASSEMBLY AND REPAIR. |
| | | Inspect and repair flywheel/connecting rod assembly.<br>See 3.27 FLYWHEEL AND CONNECTING RODS. |
| Assemble bottom end. See 3.28 CRANKCASE ASSEMBLY and 3.24 CAM COMPARTMENT AND COMPONENTS. | | |
| Assemble top end. See 3.23 TOP END OVERHAUL: ASSEMBLY. | | |
| Install engine in motorcycle. See 3.15 INSTALLING ENGINE IN CHASSIS. | | |

## PROCEDURE

### Cam Compartment Service Only

**⚠WARNING**

**To prevent accidental vehicle start-up, which could cause death or serious injury, disconnect negative (-) battery cable before proceeding. (00048a)**

1. Disconnect negative battery cable.
2. Remove exhaust shields and exhaust. See 4.15 EXHAUST SYSTEM.
3. Remove the fuel tank. See 4.4 FUEL TANK.
4. **Mid mount controls:** Remove rear brake pedal and right footpeg bracket. Disconnect assembly from master cylinder actuator lever.
5. Remove air cleaner cover and backplate. See 4.3 AIR CLEANER ASSEMBLY.
6. Remove spark plugs.

### Complete Top End Service

1. Perform all steps under Cam Compartment Service Only
2. Remove throttle control cables from induction module. See 4.8 INDUCTION MODULE.
3. Remove induction module. See 4.8 INDUCTION MODULE.
4. Remove stabilizer link and horn bracket as an assembly.
   a. Remove right side stabilizer link nut, bolt and spacer from frame tab.
   b. Remove two bolts from horn bracket and cylinder heads.
5. Gather disconnected branches of the harness and tape to the top of the wire trough to keep out of the way.

## PROCEDURE

| FASTENER | TORQUE VALUE | |
|---|---|---|
| Stabilizer link bolt | 18-22 ft-lbs | 24.4-29.8 Nm |
| Cylinder head bracket bolts | 35-40 ft-lbs | 47.5-54.2 Nm |
| Footpeg bracket screws | 25-35 ft-lbs | 33.9-47.5 Nm |

### After Complete Top End Service

1. Install induction module. See 4.8 INDUCTION MODULE.
2. Release disconnected branches of main harness from wire trough.

*NOTE*

*If the stabilizer link bolt cannot be installed without pushing the engine to the right or left, perform the vehicle alignment procedure. See 2.9 VEHICLE ALIGNMENT.*

3. Install horn bracket/stabilizer link assembly. Place spacer between frame tab and stabilizer link. Make sure that horn ground wire is installed beneath bracket on front cylinder.
   a. Tighten the stabilizer link bolt to 18-22 ft-lbs (24.4-29.8 Nm).
   b. Tighten two cylinder head bracket bolts to 35-40 ft-lbs (47.5-54.2 Nm).
4. Install spark plugs. See 1.16 SPARK PLUGS.
5. Install throttle cables to induction module. See 4.8 INDUCTION MODULE.
6. Continue with steps under After Cam Compartment Service Only.

### After Cam Compartment Service Only

1. Install fuel tank. See 4.4 FUEL TANK.
2. Install air cleaner components. See 4.3 AIR CLEANER ASSEMBLY.
3. **Mid mount controls:** Install right footpeg bracket and rear brake pedal with two screws. Tighten to 25-35 ft-lbs (33.9-47.5 Nm).
4. Install exhaust system. See 4.15 EXHAUST SYSTEM.
5. Connect negative battery cable.

## PROCEDURE

1. Position motorcycle on a lift.
2. Remove seat.

**⚠WARNING**

**Disconnect negative (-) battery cable first. If positive (+) cable should contact ground with negative (-) cable connected, the resulting sparks can cause a battery explosion, which could result in death or serious injury. (00049a)**

3. Disconnect both battery cables, negative battery cable first.
4. Remove air cleaner cover and backplate. See 4.3 AIR CLEANER ASSEMBLY.

**⚠WARNING**

**To prevent spray of fuel, purge system of high-pressure fuel before supply line is disconnected. Gasoline is extremely flammable and highly explosive, which could result in death or serious injury. (00275a)**

5. Remove fuel tank. See 4.4 FUEL TANK.
6. Remove throttle control cables from induction module. See 4.8 INDUCTION MODULE.
7. Remove exhaust system. See 4.15 EXHAUST SYSTEM.
8. Remove rear brake pedal and right footpeg bracket. Disconnect assembly from master cylinder actuator lever.
9. Disconnect the following connectors.
   a. Crankshaft position sensor connector [79]
   b. Stator/voltage regulator connector [46]
   c. Oil pressure sending unit connector [140]
10. Drain primary chaincase. See 1.8 PRIMARY CHAINCASE LUBRICANT.
11. Remove shifter foot lever from primary chaincase.
12. Remove left footpeg and bracket.
13. Remove primary chaincase housing. See 5.5 PRIMARY CHAINCASE HOUSING.
14. Remove spark plugs.
15. Remove stabilizer link and horn bracket as an assembly.
    a. Remove right side stabilizer link nut, bolt and spacer from frame tab.
    b. Remove two bolts from horn bracket and cylinder heads.
16. Disconnect MAP sensor connector [80].

*NOTE*

*Note routing of clutch cable before removing.*

17. Disconnect clutch cable:
    a. Disconnect clutch cable from clutch lever. See 2.24 CLUTCH CONTROL.
    b. Unclip cable at left frame downtube. Pull cable through chassis to right side of motorcycle.
    c. Leave cable installed on transmission.
18. Place protective material on both front downtubes.
19. Position jack under transmission with a wooden block between jack and oil pan. Raise jack enough to support transmission.
20. Secure transmission to chassis (vertically) with a ratchet strap to prevent transmission from shifting position.
21. Remove four bolts and washers to free engine from transmission.
22. Remove two bolts and washers that secure engine to front engine mount bracket.
23. Remove engine oil dipstick.

*NOTE*

*The engine aligns to the transmission with two dowels that fit in the lower mounting bolt holes and extend out approximately 0.5 in (12.7 mm) from the transmission. The engine may have to be rotated counterclockwise slightly to disengage the locating dowels.*

24. Using a hoist, remove engine from the right side of chassis.

## PROCEDURE

| FASTENER | TORQUE VALUE | |
|---|---|---|
| Transmission mounting bolts, initial torque | 15 ft-lbs | 20.3 Nm |
| Transmission mounting bolts, final torque | 34-39 ft-lbs | 46.1-52.9 Nm |
| Front engine mounting bracket bolts | 25-32 ft-lbs | 33.9-43.4 Nm |
| Stabilizer link bolt | 18-22 ft-lbs | 24.4-29.8 Nm |
| Cylinder head bracket bolts | 35-40 ft-lbs | 47.5-54.2 Nm |
| Footpeg bracket screws | 25-35 ft-lbs | 33.9-47.5 Nm |
| Shifter foot lever pinch bolt | 18-22 ft-lbs | 24.4-29.8 Nm |
| Footpeg bracket screws | 25-35 ft-lbs | 33.9-47.5 Nm |

1. Install **new** engine to transmission case gasket.
2. Using a hoist, position engine in chassis and align four transmission mounting holes. Position engine so two lower locating dowel pins engage holes in crankcase.
3. Install four bolts and washers to mate transmission and engine. Tighten bolts finger-tight.
4. Align two front engine mount bracket holes. Install bolts and washers. Tighten bolts finger-tight.
5. See Figure 3-11. Tighten the transmission mounting bolts in the sequence shown:
   a. Tighten to 15 ft-lbs (20.3 Nm).
   b. Tighten to 34-39 ft-lbs (46.1-52.9 Nm).
6. Tighten two crankcase to front engine mounting bracket bolts to 25-32 ft-lbs (33.9-43.4 Nm).
7. Remove ratchet strap securing transmission to chassis.
8. Install engine oil dipstick.
9. Remove jack and wooden block from under transmission.
10. Remove protective material from front downtubes.
11. See 2.24 CLUTCH CONTROL. Route clutch cable to left side. Install to clutch lever. Secure clutch cable to left downtube with clip.
12. Connect MAP sensor connector [80] to MAP sensor.

*NOTE*

*If the stabilizer link bolt cannot be installed without pushing the engine to the right or left, perform the vehicle alignment procedure. See 2.9 VEHICLE ALIGNMENT.*

13. Install horn bracket/stabilizer link assembly. Place spacer between frame tab and stabilizer link. Make sure that horn ground wire is installed beneath bracket on front cylinder.
   a. Tighten the stabilizer link bolt to 18-22 ft-lbs (24.4-29.8 Nm).
   b. Tighten two cylinder head bracket bolts to 35-40 ft-lbs (47.5-54.2 Nm).
14. Install spark plugs. See 1.16 SPARK PLUGS.
15. Install primary chaincase housing. See 5.5 PRIMARY CHAINCASE HOUSING.

*NOTE*

*Make sure that spring washer is in position on shifter shaft between engine and primary chaincase.*

16. Adjust clutch. See 1.10 CLUTCH.

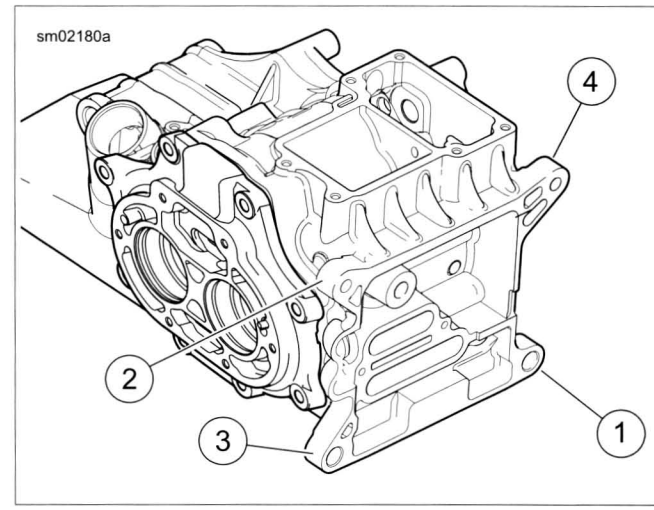


**Figure 3-11. Transmission Housing to Crankcase Tightening Sequence**

17. Install primary chaincase cover. Install drain plug. See 5.5 PRIMARY CHAINCASE HOUSING.
18. Fill primary chaincase. See 1.8 PRIMARY CHAINCASE LUBRICANT.
19. Install left side footpeg and bracket with two screws. Tighten to 25-35 ft-lbs (33.9-47.5 Nm).
20. Install shifter foot lever to primary chaincase. Tighten pinch bolt to 18-22 ft-lbs (24.4-29.8 Nm). Connect shifter linkage.
21. Connect the following connectors.
   a. Crankshaft position sensor connector [79]
   b. Stator/voltage regulator connector [46]
   c. Oil pressure sending unit connector [140]
22. Install right footpeg bracket and rear brake pedal with two screws. Tighten to 25-35 ft-lbs (33.9-47.5 Nm).
23. Install exhaust and exhaust shields. See 4.15 EXHAUST SYSTEM.
24. Install throttle control cables to induction module. See 4.8 INDUCTION MODULE.

**⚠WARNING**

**When servicing the fuel system, do not smoke or allow open flame or sparks in the vicinity. Gasoline is extremely flammable and highly explosive, which could result in death or serious injury. (00330a)**

25. Install fuel tank. See 4.4 FUEL TANK.

26. Install air cleaner components. See 4.3 AIR CLEANER ASSEMBLY.

**⚠WARNING**

**Connect positive (+) battery cable first. If positive (+) cable should contact ground with negative (-) cable connected, the resulting sparks can cause a battery explosion, which could result in death or serious injury. (00068a)**

27. Connect both battery cables, positive battery cable first.

**⚠WARNING**

**After installing seat, pull upward on seat to be sure it is locked in position. While riding, a loose seat can shift causing loss of control, which could result in death or serious injury. (00070b)**

28. Install seat.
29. Install **new** oil filter. Fill engine with oil. See 1.5 ENGINE OIL AND FILTER.
30. Remove motorcycle from lift.
31. Perform vehicle alignment. See 2.9 VEHICLE ALIGNMENT.
32. Check rear brakes, clutch and throttle for proper operation.
33. Check engine oil level. See 1.5 ENGINE OIL AND FILTER.

## GENERAL

It is assumed that each step performed on one cylinder is repeated on the other.

To perform a complete top end overhaul, follow all steps listed in this section including inspection and repair procedures.

## ROCKER COVERS

*NOTE*

*Dirt caked on cooling fins and other areas can fall into crankcase bore. It can also stick to sub-assemblies as parts are removed. Abrasive particles can damage machined surfaces or plug oil passageways. Clean parts before disassembly to prevent component damage.*

1. Use low-pressure, compressed air to thoroughly clean exterior surfaces of engine before disassembly.
2. See Figure 3-12. Following the sequence shown, loosen the six rocker cover screws. Remove the rocker cover screws.
3. Remove the rocker cover and gasket. Discard gasket.

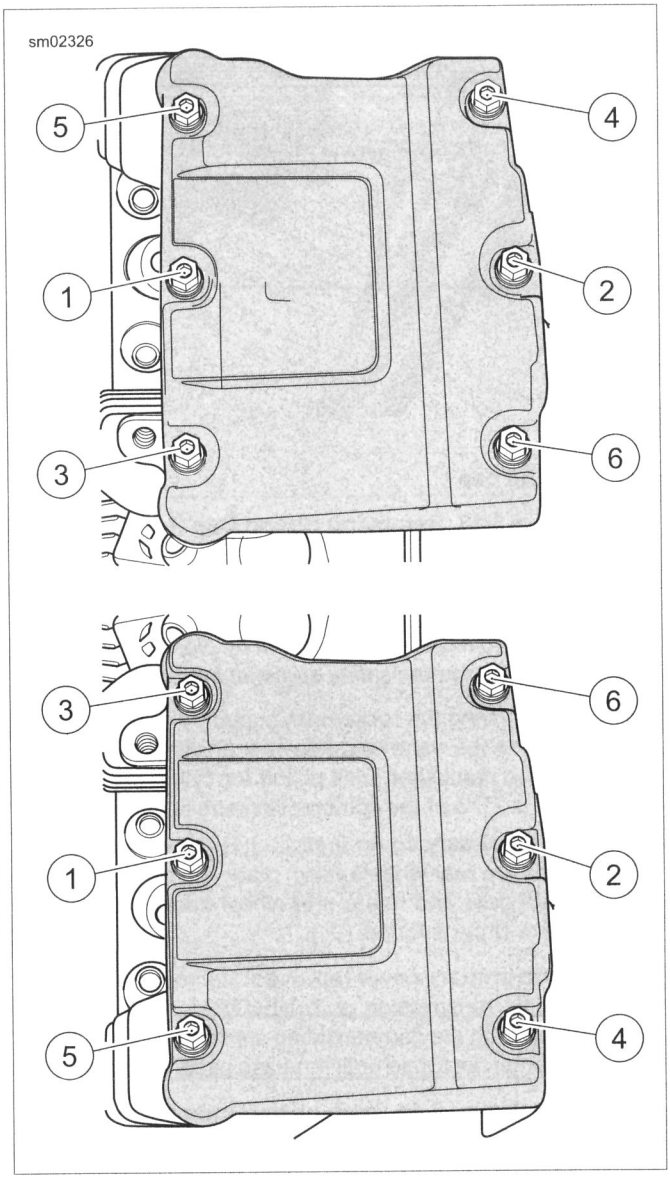


**Figure 3-12. Rocker Cover Bolt Removal Sequence**

## ROCKER ARM SUPPORT PLATE

| PART NUMBER | TOOL NAME |
|---|---|
| HD-48283 | CRANKSHAFT ROTATING WRENCH |

1. See Figure 3-13. Release pushrod covers:
   a. Insert the blade of a screwdriver into tab (1) of spring cap retainer.
   b. While pushing down on spring cap (2), rotate bottom of screwdriver toward outboard side to remove.
   c. Repeat step on second pushrod cover.
   d. Collapse upper and lower pushrod covers.

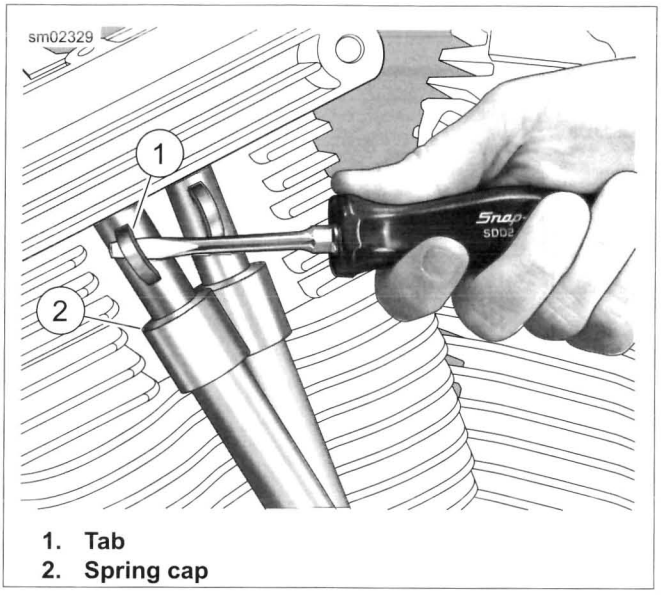


1. **Tab**
2. **Spring cap**

**Figure 3-13. Removing Spring Cap Retainer**

*NOTE*

*Do not attempt to rotate the crankshaft by placing a socket on the crankshaft or compensating sprocket bolt.*

2. When removing the rocker arm support plate, both lifters must be on the base circle (lowest position) of the cam. Rotate the crankshaft until piston for cylinder being serviced is at TDC of the compression stroke.
   a. **With primary cover installed:** Remove spark plugs. With the rear wheel raised, place the transmission in sixth gear and rotate rear wheel backward until the base circle is found.
   b. **With primary cover removed:** Remove spark plugs. Verify transmission is in NEUTRAL. Using a large socket on the compensating sprocket retainer, rotate counterclockwise until the base circle is found.
   c. See Figure 3-14. **With engine mounted in engine stand:** Install CRANKSHAFT ROTATING WRENCH (Part No. HD-48283) on sprocket shaft. Rotate counterclockwise until the base circle is found.

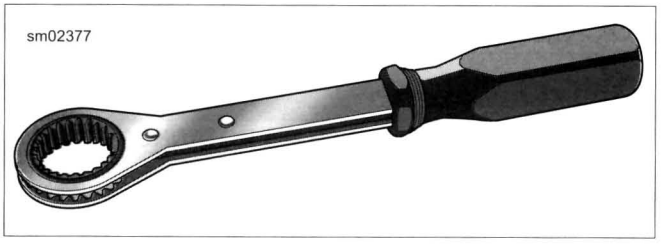


**Figure 3-14. Crankshaft Rotating Wrench**

*NOTE*

*Breather baffle assembly is manufactured with gaskets attached. Any time the breather is disassembled, the baffle assembly must be replaced with a **new** assembly.*

3. See Figure 3-15. Remove breather assembly (arrow) and filter element from the rocker arm support plate. For inspection and repair information, see 3.17 BREATHER ASSEMBLY.
4. Loosen the four rocker arm support plate screws one-quarter turn at a time in the sequence shown. Remove the screws.
5. Remove the rocker arm support plate assembly. For inspection and repair information, see 3.18 ROCKER ARM SUPPORT PLATE.
6. See Figure 3-16. Remove and discard breather O-ring from rocker housing.

*NOTE*

*If the other cylinder also requires service, find the cam base circle for that cylinder before disassembling.*

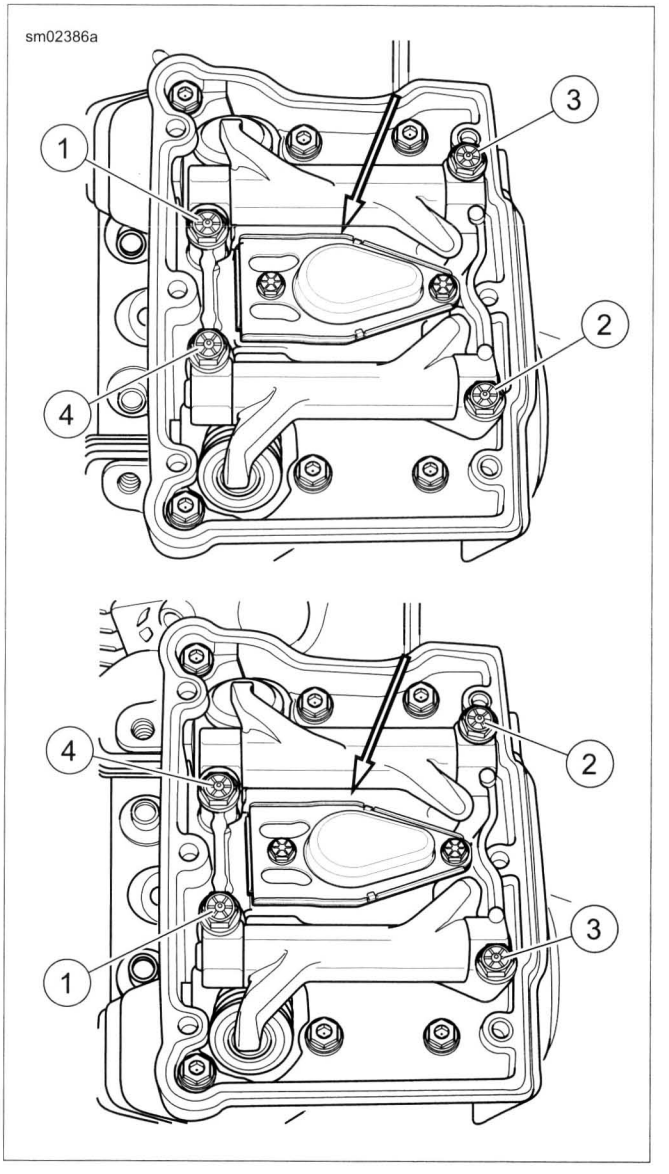


**Figure 3-15. Rocker Arm Support Tightening Sequence**

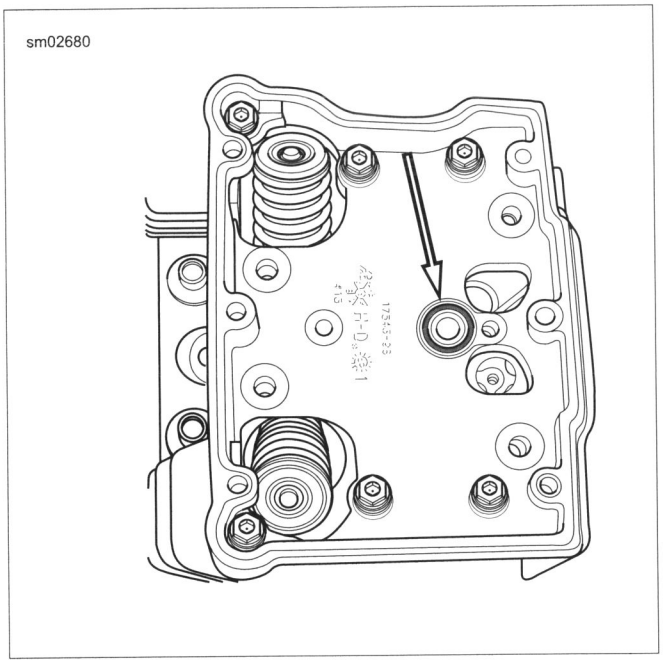


**Figure 3-16. Breather Baffle Hole O-Ring**

## PUSHRODS, LIFTERS AND COVERS

*NOTE*

*Mark parts for location and orientation upon removal.*

1. See Figure 3-17. Remove the pushrods and pushrod covers:
   a. Remove pushrods.
   b. Remove pushrod covers.
   c. Remove and discard three O-rings from pushrod covers. If O-ring is missing from upper pushrod cover, make sure to remove it from the cylinder head bore.
2. See Figure 3-18. Remove lifter covers:
   a. Remove four screws (1).
   b. Remove the lifter cover (2) and gasket. Discard gasket.
3. Remove lifters:
   a. Remove the lifter anti-rotation pin.
   b. Remove the lifters and place in clean plastic bags to prevent contamination.
4. For inspection and repair information, see 3.19 PUSHRODS, LIFTERS AND COVERS.

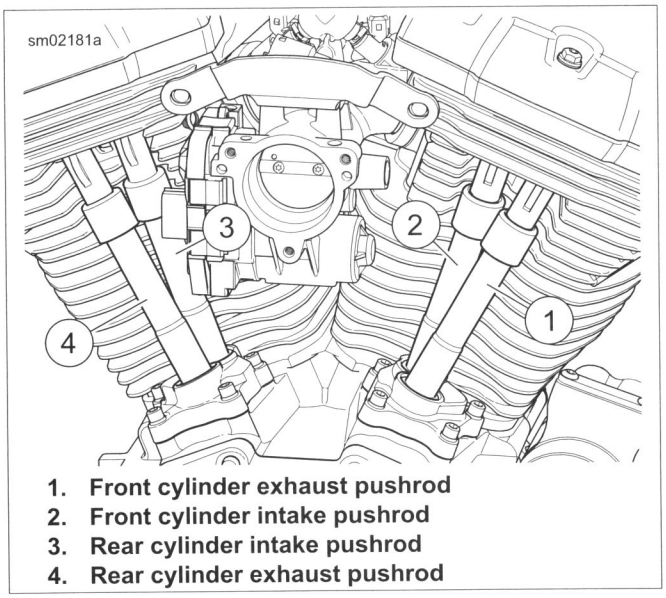


**1. Front cylinder exhaust pushrod**
**2. Front cylinder intake pushrod**
**3. Rear cylinder intake pushrod**
**4. Rear cylinder exhaust pushrod**

**Figure 3-17. Pushrod Locations**

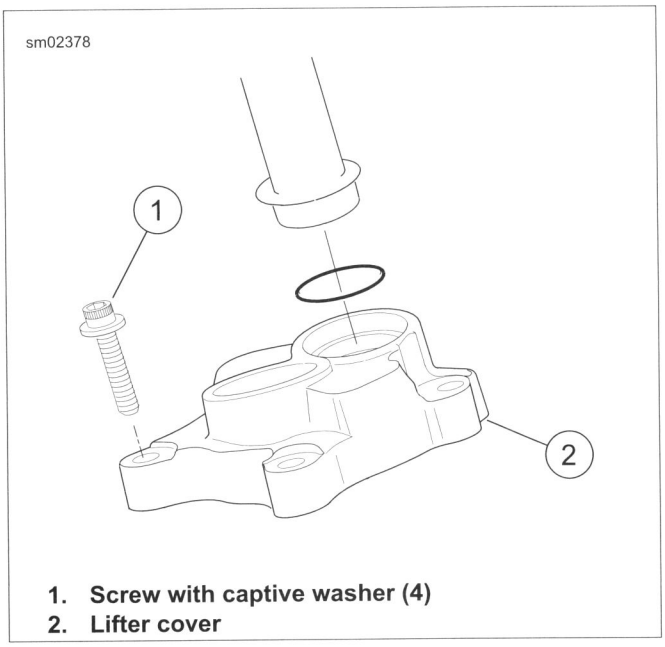


**1. Screw with captive washer (4)**
**2. Lifter cover**

**Figure 3-18. Lifter Cover**

## CYLINDER HEAD

| PART NUMBER | TOOL NAME |
|---|---|
| HD-42324-A | CYLINDER TORQUE PLATES |

1. See Figure 3-19. Following the sequence shown, remove the six rocker housing screws.
2. Remove rocker housing and gasket. Discard gasket.

*NOTE*

*To prevent distortion of the cylinder head, cylinder and cylinder studs, gradually loosen the cylinder headbolts in the specified sequence.*

3. See Figure 3-20. Remove cylinder headbolts:
   a. Following the sequence shown, loosen cylinder headbolts one-quarter turn at a time.
   b. Remove the cylinder headbolts.
4. Remove cylinder head and head gasket.

*NOTE*

*Save the cylinder head gasket (if salvageable) for use with the CYLINDER TORQUE PLATES (Part No. HD-42324-A) when measuring, boring or honing of the cylinder is required.*

5. For inspection and repair information, see 3.20 CYLINDER HEAD.

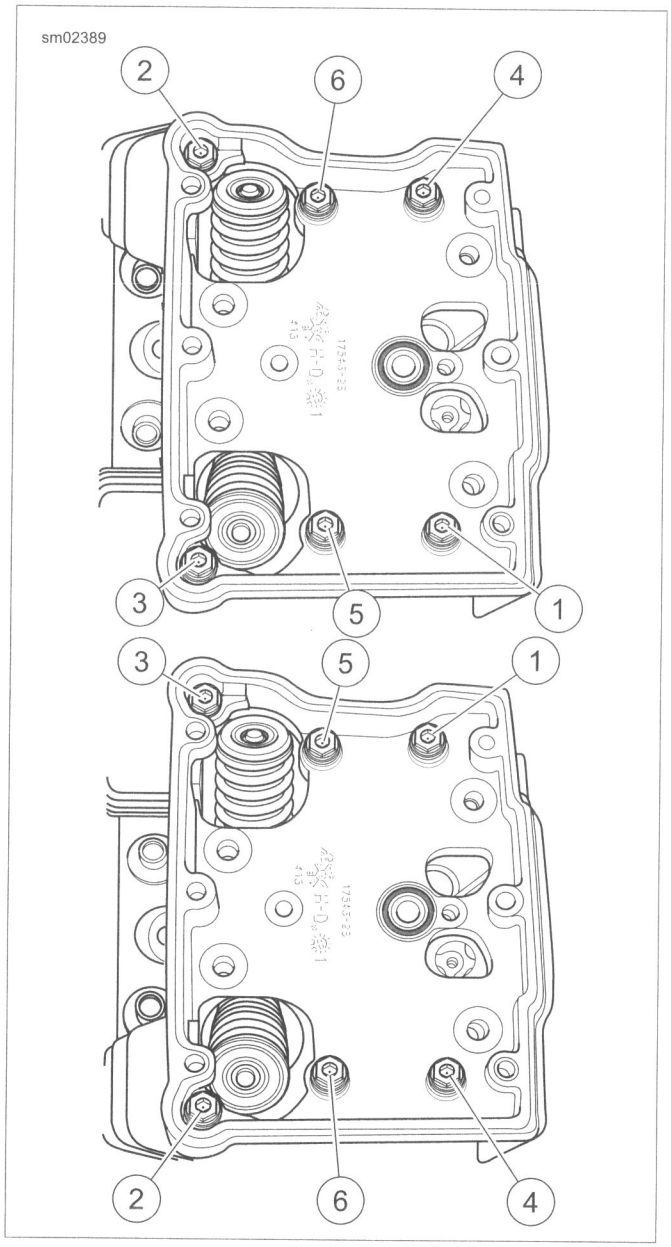


**Figure 3-19. Rocker Housing Bolts Removal Sequence**

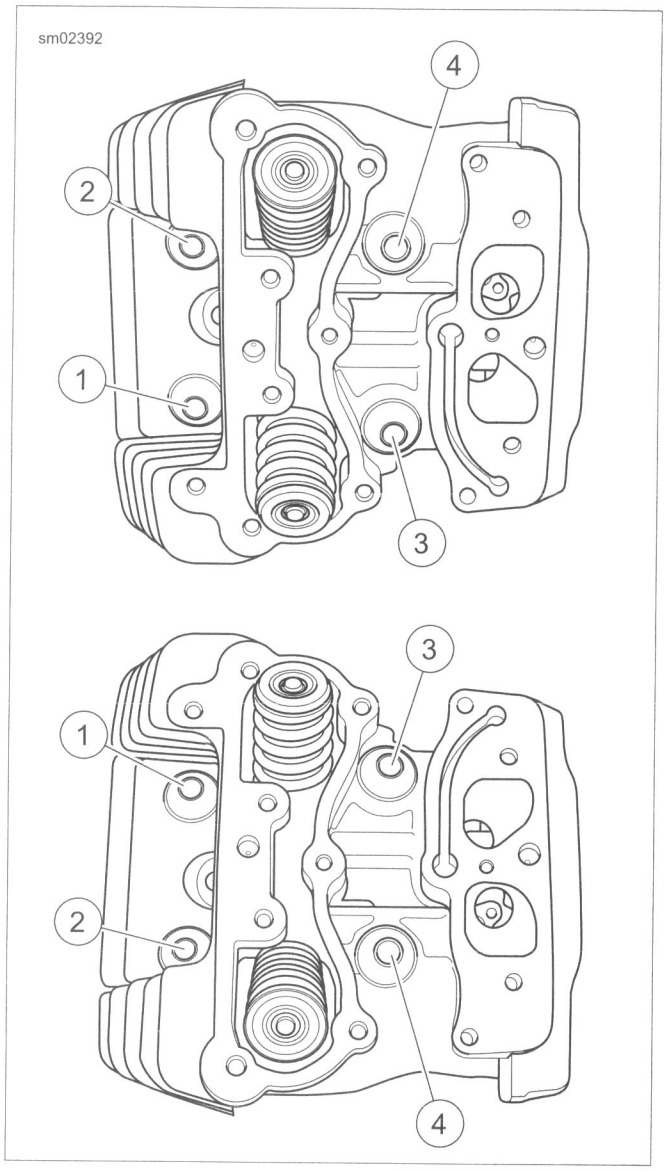


**Figure 3-20. 1/4 Turn Head Bolts in Sequence**

## CYLINDER

1. Raise the cylinder just enough to place clean shop towels under the piston. This will prevent any dirt or debris, such as broken ring pieces, from falling into the crankcase bore.

*NOTE*

*Do not bend the cylinder studs. Even a slight bend or nick can cause a stress riser leading to stud failure.*

2. Carefully remove the cylinder. Exercise caution to avoid bending the cylinder studs. As the piston becomes free of the cylinder, hold it upright to prevent it from striking the studs or dragging across the stud thread area.
3. Mark cylinder FRONT or REAR as appropriate.
4. Slide approximately 6.0 in (152 mm) of plastic tubing, rubber hose or conduit over each cylinder stud. Use material with ID of 0.5 in (12.7 mm) to protect cylinder studs and piston from damage.
5. See Figure 3-21. Remove O-ring seal (4) from the bottom of the cylinder liner. Discard O-ring seal.

6. See Figure 3-22. Remove O-ring from dowel pin (4) on base of cylinder deck. Discard O-ring.
7. For inspection and repair information, see 3.21 CYLINDER.

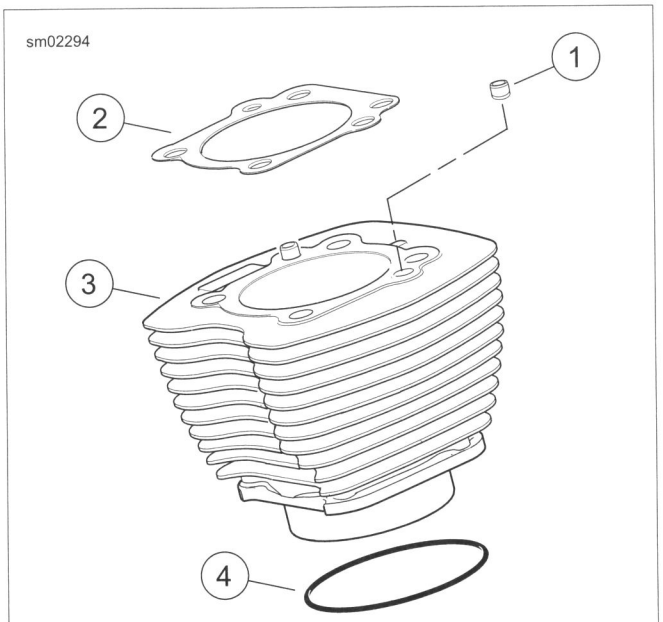


1. **Dowel pin**
2. **Head gasket**
3. **Cylinder**
4. **O-ring seal**

**Figure 3-21. Cylinder Assembly**

## PISTON

| PART NUMBER | TOOL NAME |
|---|---|
| HD-42317-A | PISTON PIN RETAINING RING INSTALLER |
| HD-42320-C | PISTON PIN REMOVER |

1. Place clean shop towels over crankcase bore. This prevents the piston pin retaining ring from falling into the crankcase.

**⚠WARNING**

**Wear safety glasses or goggles when removing or installing piston pin retaining rings. Piston pin retaining rings are compressed in the ring groove and can fly out when removed from the groove, which could result in serious eye injury. (00293a)**

*NOTE*

*It is not necessary to remove both piston pin retaining rings for piston removal.*

2. See Figure 3-22. Using PISTON PIN RETAINING RING INSTALLER (Part No. HD-42317-A), remove and discard one piston pin retaining ring.
   a. Insert tool (1) into piston pin bore. Position claw on tool in slot of piston (2) (directly under retaining ring).
   b. Squeeze handles of tool together. Pull retaining ring from bore. Discard retaining ring.

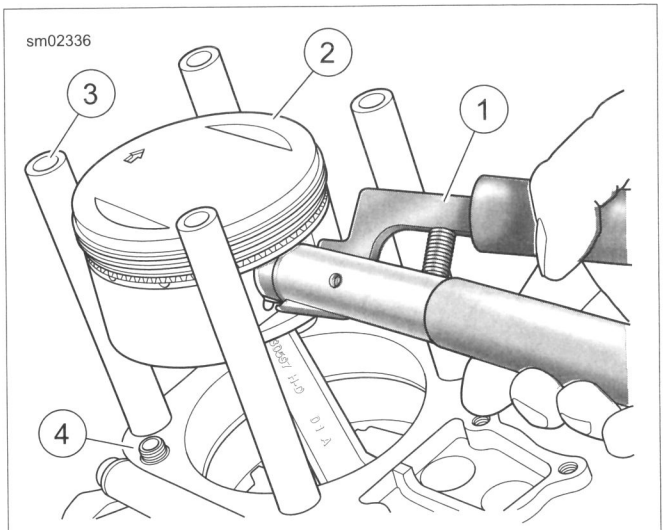


1. **Piston pin retaining ring installer**
2. **Piston**
3. **Protective material over cylinder studs**
4. **Cylinder deck dowel (O-ring not shown)**

**Figure 3-22. Piston Pin Retaining Ring Removal**

3. See Figure 3-23. Remove the piston pin. Use PISTON PIN REMOVER (Part No. HD-42320-C) if necessary.
4. Remove the piston. Hold the connecting rod to prevent it from striking the crankcase.
5. Place a 3.0 in (76.2 mm) long piece of foam-type water pipe insulation around connecting rod to prevent damage. Use material with an ID of 1.0 in (25.4 mm).
6. Turn the piston over. Mark the pin boss with the letters F (front) or R (rear) to identify location.
7. For inspection information, see 3.22 PISTON.
8. Complete engine repair:
   a. If performing a top end overhaul only, see 3.23 TOP END OVERHAUL: ASSEMBLY.
   b. If performing a complete engine overhaul, see 3.24 CAM COMPARTMENT AND COMPONENTS and 3.26 CRANKCASE DISASSEMBLY AND REPAIR.

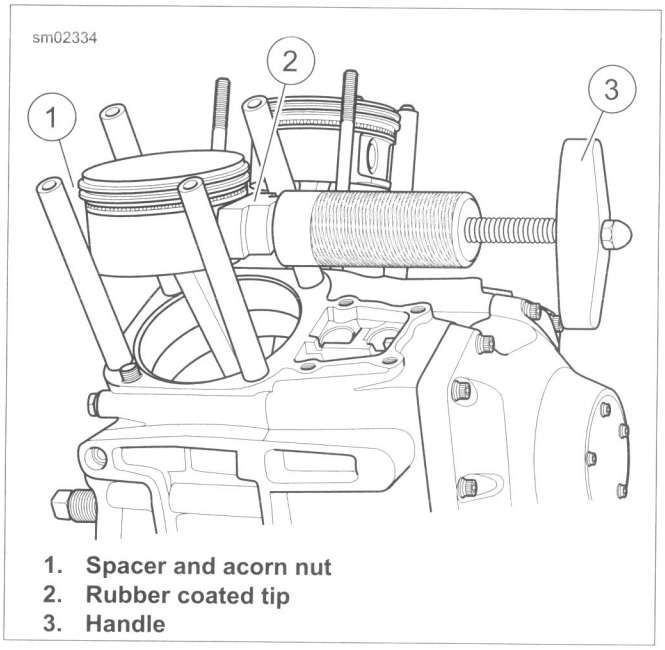


1. Spacer and acorn nut
2. Rubber coated tip
3. Handle

Figure 3-23. Piston Pin Removal

## DISASSEMBLY

*NOTE*

*See Figure 3-24. Breather baffle assembly is manufactured with gaskets attached. Replacement part is supplied with the filter element (5) and umbrella valve (3). Any time the breather is disassembled, the baffle assembly must be replaced with a **new** assembly.*

1. Remove rocker cover. See 3.16 TOP END OVERHAUL: DISASSEMBLY, Rocker Covers.
2. Remove two fasteners (1). Remove breather cover (2).
3. Remove breather baffle (4). Discard breather baffle, filter element (5) and umbrella valve (3).

## CLEANING AND INSPECTION

**⚠WARNING**

**Compressed air can pierce the skin and flying debris from compressed air could cause serious eye injury. Wear safety glasses when working with compressed air. Never use your hand to check for air leaks or to determine air flow rates. (00061a)**

1. Clean cover and screws in a non-volatile cleaning solution or solvent. Dry parts with low-pressure, compressed air.
2. Set a straightedge diagonally across the length of the breather cover gasket surface.
3. Slide a feeler gauge beneath the straightedge to check the breather cover flatness.
4. Repeat checking the opposite diagonal.
5. Replace the breather cover if warpage exceeds 0.005 in (0.13 mm).

## ASSEMBLY

See Figure 3-24. Install breather assembly and rocker cover using **new** baffle assembly. See 3.23 TOP END OVERHAUL: ASSEMBLY, Breather and Rocker Cover.

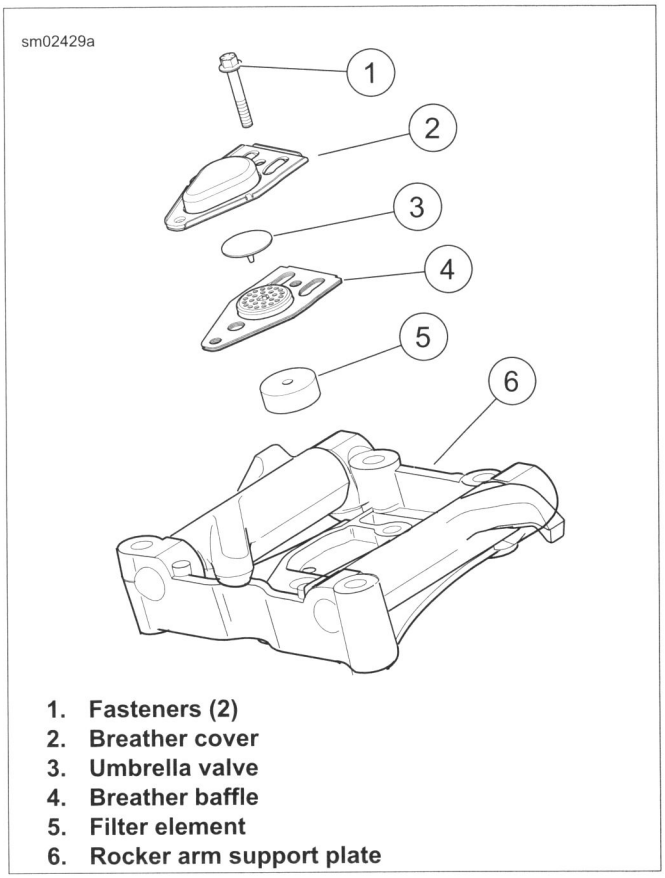


1. **Fasteners (2)**
2. **Breather cover**
3. **Umbrella valve**
4. **Breather baffle**
5. **Filter element**
6. **Rocker arm support plate**

**Figure 3-24. Breather Assembly**

## DISASSEMBLY

1. See Figure 3-26. Remove four bolts and flat washers (1) from the rocker arm support plate (5).
2. See Figure 3-25. Check for proper end play.
   a. Insert a feeler gauge between the rocker arm and support plate.
   b. Repeat measurement on other rocker arm.
   c. Replace the rocker arm, rocker arm support plate or both if end play exceeds 0.025 in (0.635 mm).
3. See Figure 3-26. Remove the rocker arm shafts (4) so that the notched ends exit the rocker arm support plate (5) first. Use a hammer and brass drift if necessary. Mark the shafts so that they are installed in their original locations at time of assembly.
4. Remove the rocker arms. Mark the rocker arms to indicate location.

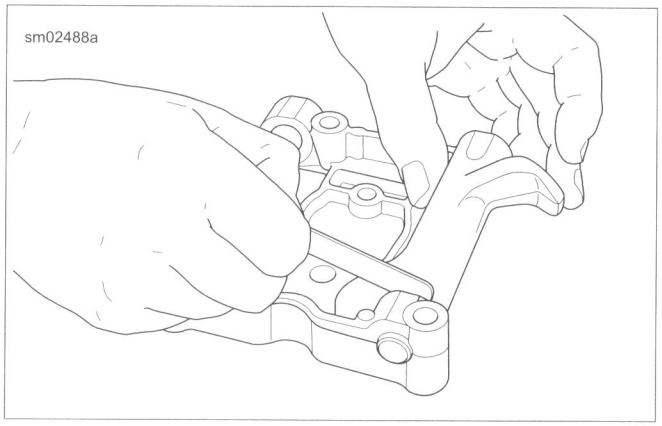


**Figure 3-25. Check End Play**

## CLEANING, INSPECTION AND REPAIR

### Inspection

**⚠WARNING**

**Compressed air can pierce the skin and flying debris from compressed air could cause serious eye injury. Wear safety glasses when working with compressed air. Never use your hand to check for air leaks or to determine air flow rates. (00061a)**

1. Clean all parts in a non-volatile cleaning solution or solvent. Dry parts with low-pressure, compressed air.
2. See Figure 3-26. Inspect rocker arms (3). Replace rocker arm if excessive wear is found.
   a. Check for uneven wear or pitting where valve stem tips make contact.
   b. Check for concave wear where rocker arms contact the pushrod ends.
3. Verify that oil holes in rocker arms and rocker arm support plate (5) are clean and open.
4. Inspect rocker arm shafts (4) for scratches, burrs, scoring or excessive wear. Replace if necessary.

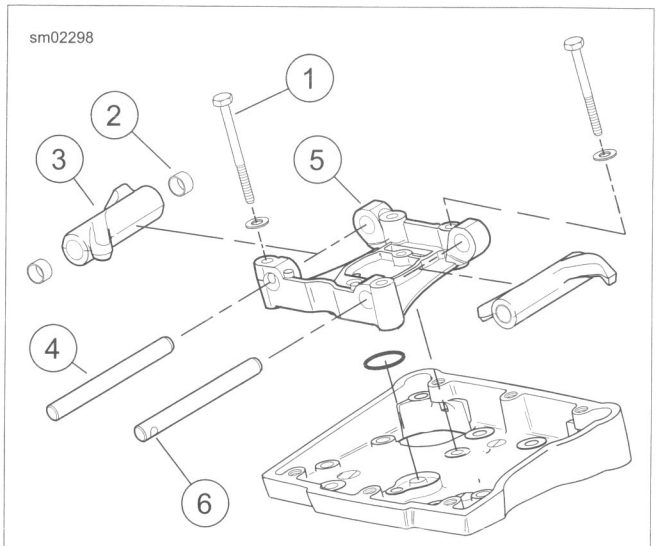


1. **Bolt with flat washer**
2. **Rocker arm bushings**
3. **Rocker arm**
4. **Rocker arm shaft**
5. **Rocker arm support plate**
6. **Notch**

**Figure 3-26. Rocker Arm Assembly**

### Rocker Shaft Fit

1. See Figure 3-27. Measure the inside diameter of the rocker arm support plate bore.
2. See Figure 3-28. Measure the outside diameter of the rocker arm shaft where it fits in the bore.
3. Repeat the measurement on opposite side of support plate and shaft. Replace shaft, support plate or both if clearance exceeds service wear limit of 0.0035 in (0.089 mm).

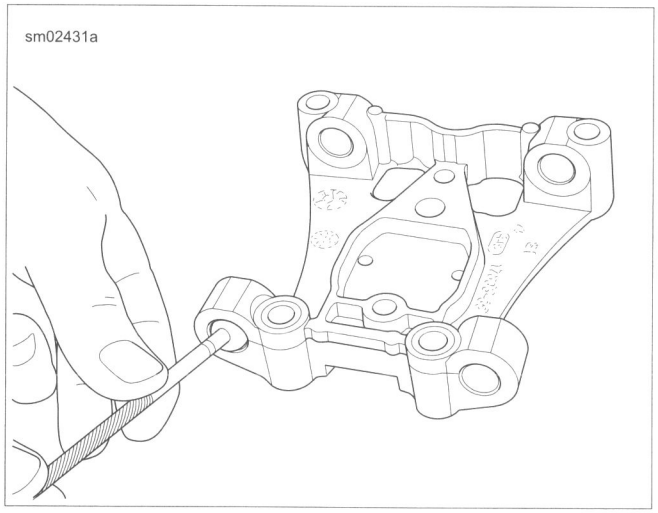


**Figure 3-27. Checking Support Plate Bore**

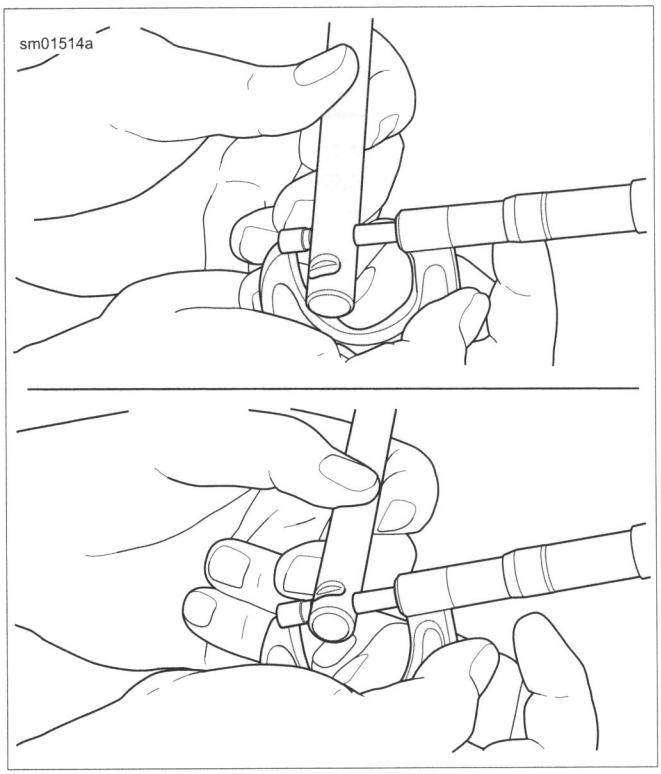


**Figure 3-28. Measuring Rocker Arm Shaft Diameter at Bushing Position (top) and Cover Position (bottom)**

## Rocker Arm Shaft to Bushing

1. Check rocker arm shaft to bushing fit.
   a. See Figure 3-29. Measure the inside diameter of the rocker arm bushing.
   b. See Figure 3-28. Measure the outside diameter of the rocker arm shaft where it rides in the bushing.
2. Repeat measurement on opposite side of rocker arm and shaft. Replace shaft or bushings if clearance exceeds service wear limit of 0.0035 in (0.089 mm).

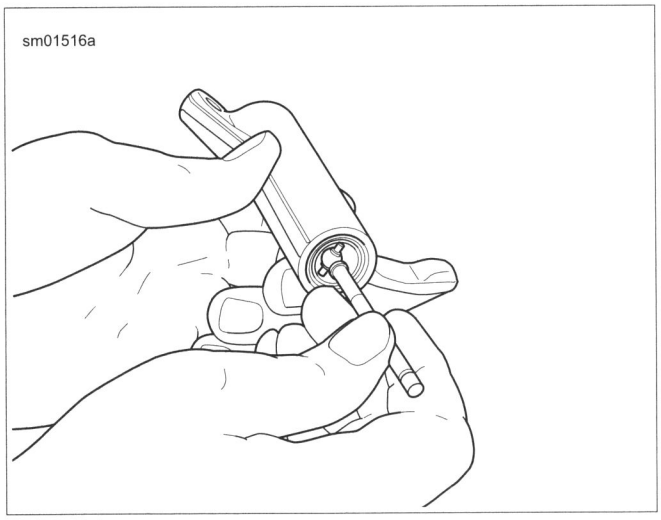


**Figure 3-29. Measuring Rocker Arm Bushing Inner Diameter**

## Replace Rocker Arm Bushings

*NOTE*

*Bushing replacement and reaming must be done one at a time to achieve proper alignment. Follow all steps for one bushing. Then repeat for the other bushing.*

1. See Figure 3-30. Remove rocker arm bushing:
   a. Turn a 9/16-18 tap into bushing until tight.
   b. Place rocker arm under ram of arbor press with tap at bottom.
   c. Use a discarded rocker arm shaft as a press arbor.
   d. Press against shaft until both tap and bushing are free.
2. Orient bushing with split line facing top of rocker arm. Using a suitable driver, press **new** bushing into rocker arm until flush with casting.

*NOTE*

*Never back the reamer out of rocker arm or **new** bushing will be damaged.*

3. Ream bushing:
   a. Secure rocker arm in a vise with soft jaws.
   b. Insert reamer through opposite bushing until it contacts **new** bushing.
   c. Rotate reamer until it exits the opposite side.
   d. Draw the reamer through **new** bushing to remove.
4. Repeat steps to remove, install and ream second bushing.

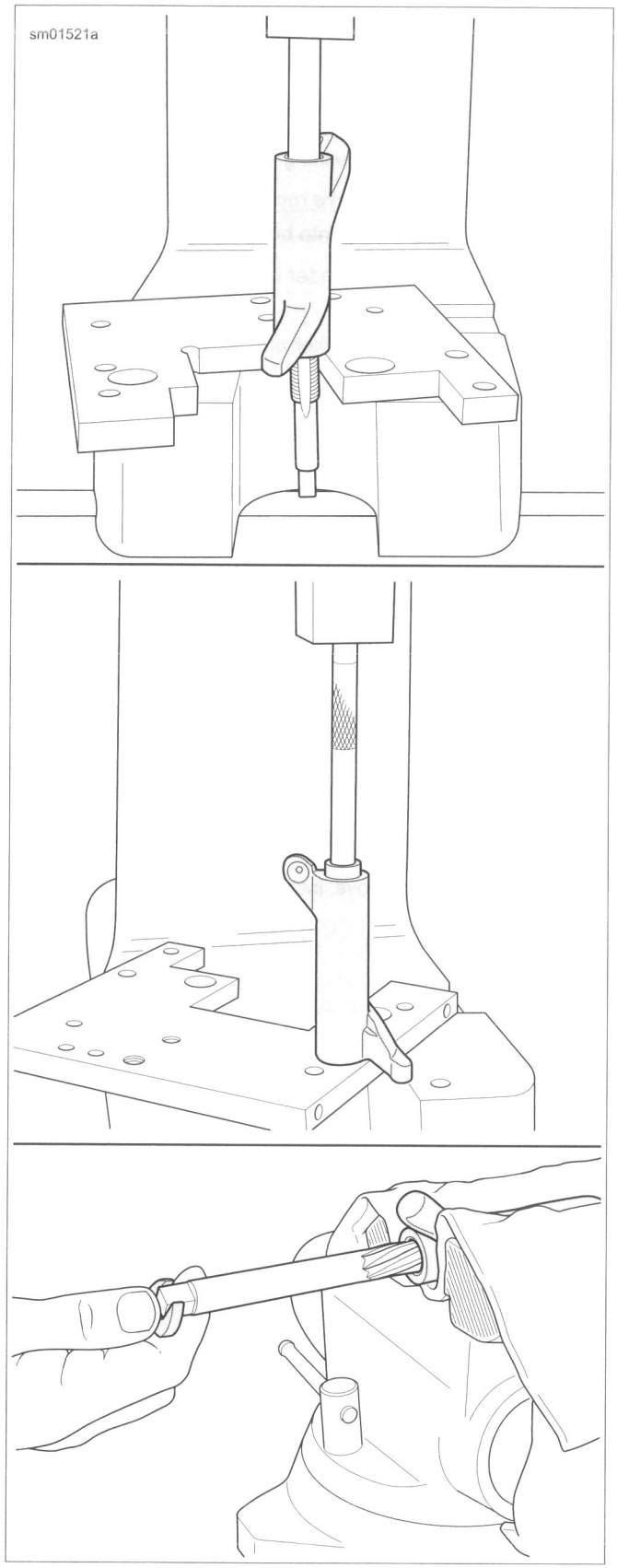


Figure 3-30. Replacing Rocker Arm Bushings

## ASSEMBLY

1. Place the rocker arms into position on the rocker arm support plate.
2. Install rocker arm shafts:
   a. Push unnotched ends of rocker arm shafts into right side of support plate, then into rocker arms.
   b. As they approach their fully installed positions, rotate shafts until notches are aligned with bolt holes in support plate.
3. Install the four bolts in the rocker arm support plate. Make sure the bolts on the pushrod side (right) engage the notches in the rocker arm shafts.

## DISASSEMBLY

1. See Figure 3-32. Separate upper (2) and lower (8) pushrod covers.
2. Remove and discard O-ring (9).
3. Remove O-ring (1). Slide O-ring (7), flat washer (6), spring (5) and spring cap (4) from upper pushrod cover (2). Discard O-rings.

## CLEANING AND GENERAL INSPECTION

1. See Figure 3-32. Clean old gasket material from the lifter cover (11).
2. Except for the hydraulic lifters (14), clean all parts in a non-volatile cleaning solution or solvent. Verify that the O-ring seats and contact surfaces of the pushrod covers (2, 8) are completely clean.

**⚠WARNING**

**Compressed air can pierce the skin and flying debris from compressed air could cause serious eye injury. Wear safety glasses when working with compressed air. Never use your hand to check for air leaks or to determine air flow rates. (00061a)**

3. Dry parts with low-pressure, compressed air. Verify that all oil holes are clean and open.
4. Examine lifter rollers. If damaged, examine the cam lobe on which the lifter operates.
   a. Verify that the hydraulic lifter rollers turn freely.
   b. Check for flat spots, scuff marks and pitting.
   c. See Figure 3-31. Inspection may show that hydraulic lifter roller surface appears dull. This is frosting (2). Frosting is considered a cosmetic condition and does not affect function.
5. Inspect the lifter socket for signs of wear. Verify that the plunger of the hydraulic lifter is fully extended up against the C-clip. Pump plunger to verify lifter operation.
6. See Figure 3-32. Examine the pushrods (15). Replace any pushrods that are bent, dented, damaged, discolored or if the ball ends show signs of excessive wear or damage.
7. Cover all parts to protect them from dust and dirt.

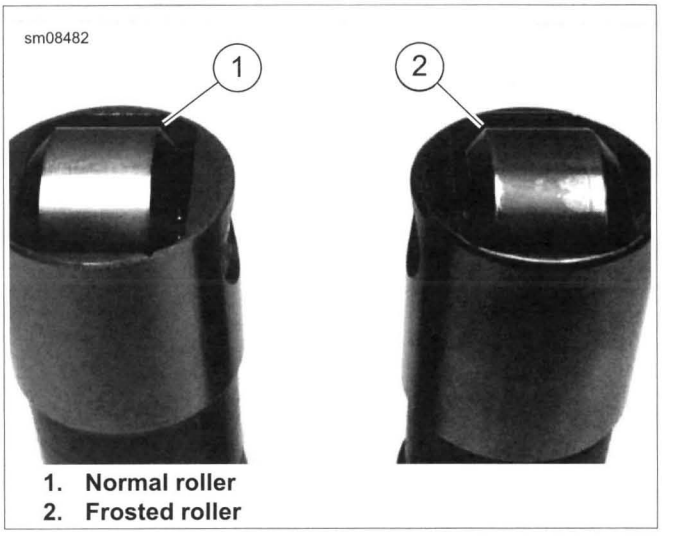


1. **Normal roller**
2. **Frosted roller**

**Figure 3-31. Roller Inspection**

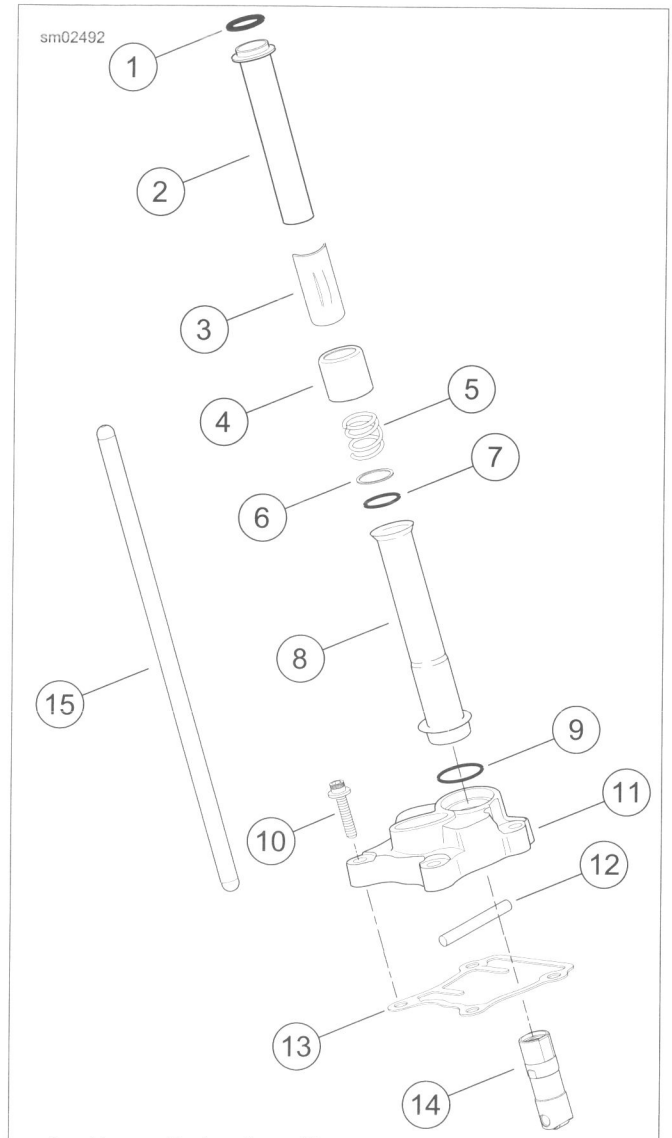


1. **Upper O-ring (small)**
2. **Upper pushrod cover**
3. **Spring cap retainer**
4. **Spring cap**
5. **Spring**
6. **Flat washer**
7. **Middle O-ring (intermediate)**
8. **Lower pushrod cover**
9. **Lower O-ring (large)**
10. **Lifter cover screw**
11. **Lifter cover**
12. **Anti-rotation pin**
13. **Lifter cover gasket**
14. **Hydraulic lifter**
15. **Pushrod**

**Figure 3-32. Pushrods, Lifters and Covers**

## INSPECT LIFTERS

1. Measure the lifter outer diameter. Record the measurement.
2. Measure lifter bore. Subtract this measurement from the lifter measurement to determine clearance.
   a. Clearance when **new** is 0.0008-0.0020 in (0.0203-0.0508 mm).
   b. Install **new** lifters and/or replace crankcases if clearance exceeds service wear limit of 0.007 in (0.076 mm).
3. Check lifter roller end clearance.
   a. Allowable end clearance is within 0.008-0.022 in (0.203-0.559 mm).
   b. Replace lifters if end clearance exceeds service wear limit of 0.022 in (0.559 mm).
4. Soak lifters in clean engine oil. Keep covered until assembly.

## ASSEMBLE

1. See Figure 3-33. Apply a thin film of clean engine oil to **new** O-rings (1, 7 and 9) before installation.
2. Install upper O-ring (1) on the upper pushrod cover (2).
3. Slide the spring cap (4), spring (5), flat washer (6) and middle O-ring (7) onto the body of the upper pushrod cover. Move parts up until spring cap contacts upper O-ring seat.
4. Fit the straight end of the upper pushrod cover into the flared end of the lower pushrod cover (8).
5. Install lower O-ring (9) on lower pushrod cover.

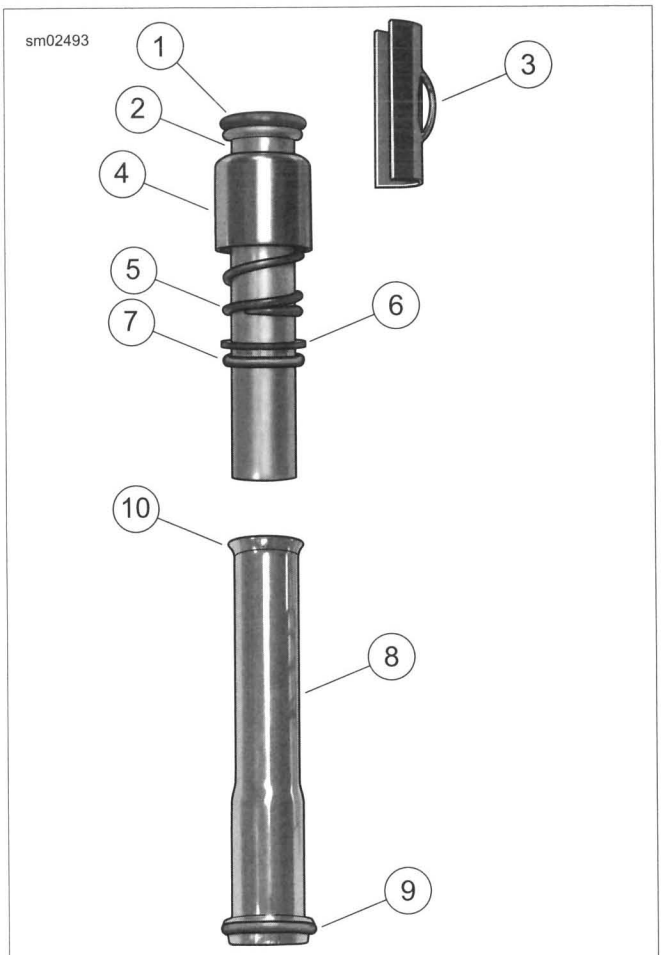


1. Upper O-ring (small)
2. Upper pushrod cover
3. Spring cap retainer
4. Spring cap
5. Spring
6. Flat washer
7. Middle O-ring (intermediate)
8. Lower pushrod cover
9. Lower O-ring (large)
10. Flared end of lower pushrod cover

**Figure 3-33. Assembled Pushrod Cover**

## DETERMINING SERVICE

1. With valves installed, raise cylinder head to strong light source. If light is visible around edges of seats, proceed to 3.20 CYLINDER HEAD, Disassembly to recondition cylinder head.
2. One at a time, fill each port with solvent. Wait ten seconds and check for leakage past the valve seats. If solvent leaks, proceed to 3.20 CYLINDER HEAD, Disassembly to recondition cylinder head.

## DISASSEMBLY

| PART NUMBER | TOOL NAME |
|---|---|
| HD-34736-B | VALVE SPRING COMPRESSOR |
| HD-39786 | CYLINDER HEAD HOLDING FIXTURE |

1. **ACR models:** Remove ACR. See 7.16 AUTOMATIC COMPRESSION RELEASE (ACR).
2. See Figure 3-34. Secure cylinder head for service.
   a. Turn 12 mm end of CYLINDER HEAD HOLDING FIXTURE (Part No. HD-39786) (1) into cylinder head (2) spark plug hole.
   b. Clamp tool in vise at a 45 degree angle or one that offers a comfortable working position.

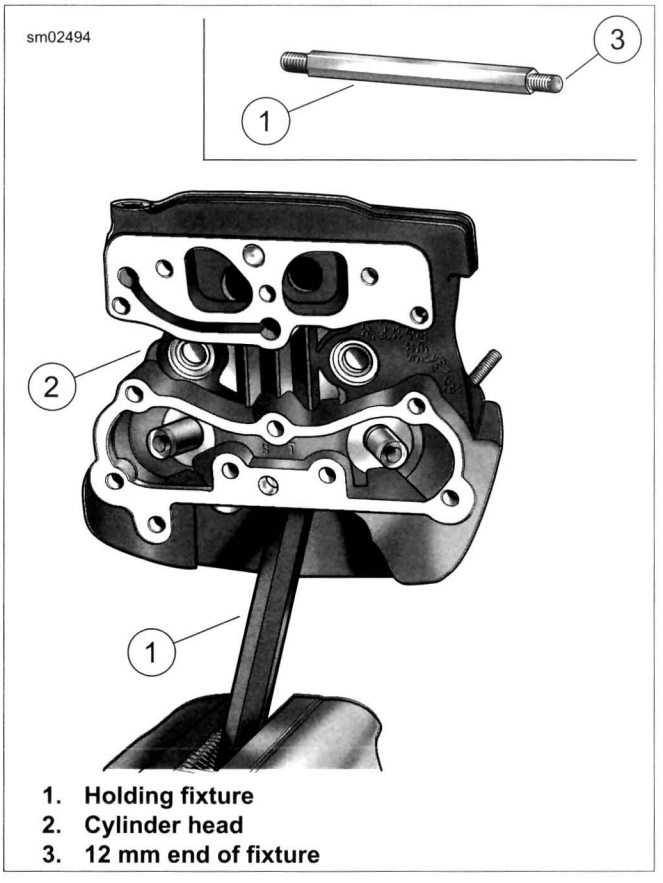


1. **Holding fixture**
2. **Cylinder head**
3. **12 mm end of fixture**

**Figure 3-34. Cylinder Head Holding Fixture**

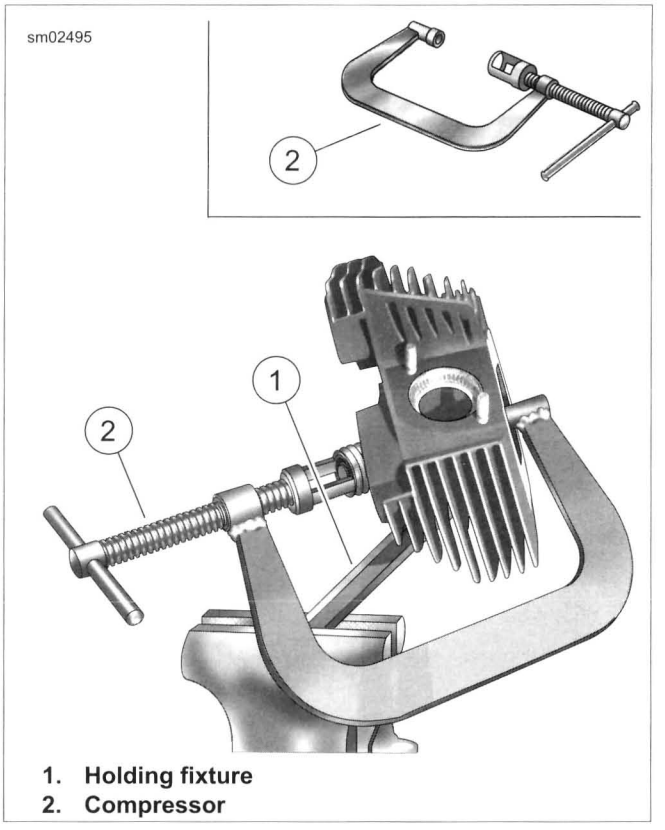


1. **Holding fixture**
2. **Compressor**

**Figure 3-35. Valve Spring Compressor**

3. See Figure 3-35. Release valve spring compression.
   a. Place VALVE SPRING COMPRESSOR (Part No. HD-34736-B) (2) over cylinder head. Center blunt end on the valve head. Seat adapter on the valve spring retainer.
   b. See Figure 3-36. Rotate forcing screw to compress valve spring until tapered keepers (1) can be removed from valve stem (11).
   c. Rotate forcing screw to release valve spring compression.
4. Remove spring retainer (2) and valve spring (3).
5. Slide valve (11) from the valve guide (5).
6. Remove valve stem seal assembly (4).
7. Mark valve head F (front) or R (rear) for identification. Also, separate and tag tapered keepers, valve spring and spring retainer so that they are installed on the same valve at time of assembly.
8. Remove remaining valve and components.
9. Remove holding fixture from spark plug hole.

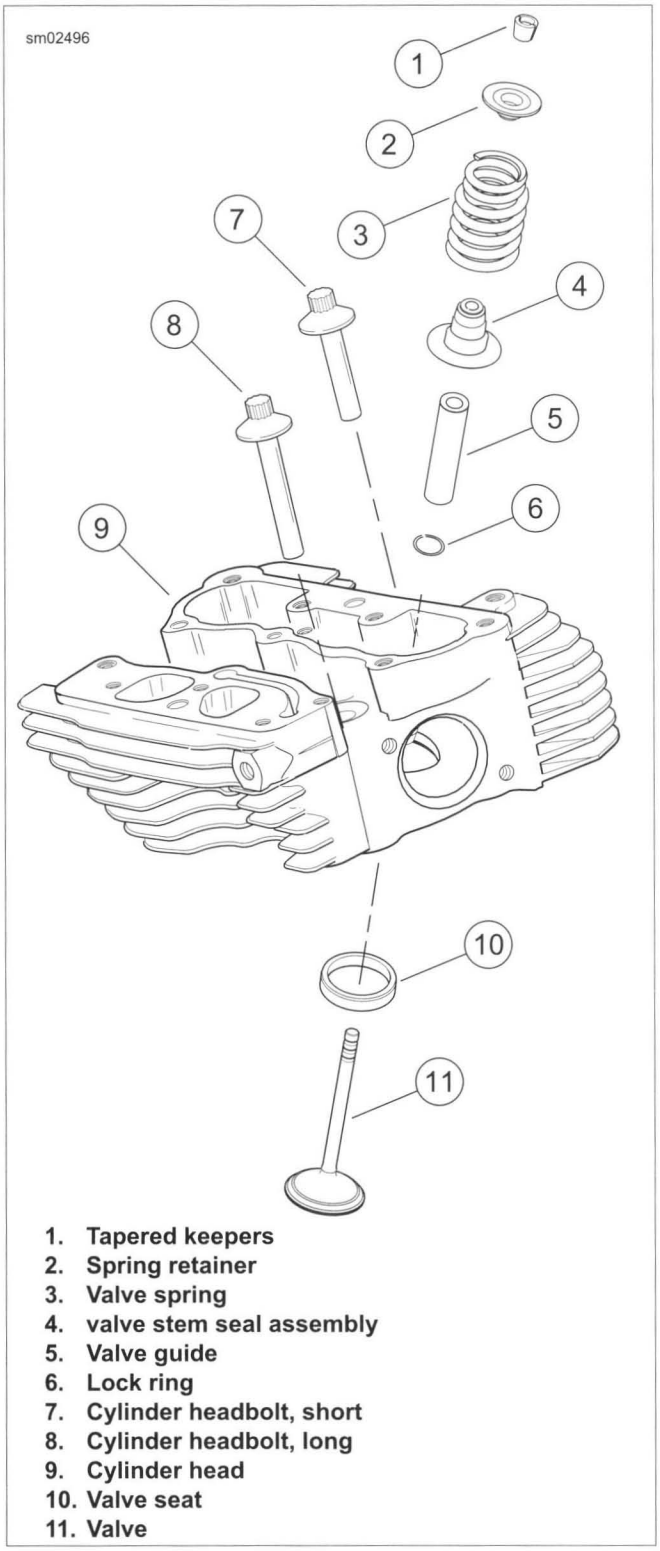


1. **Tapered keepers**
2. **Spring retainer**
3. **Valve spring**
4. **valve stem seal assembly**
5. **Valve guide**
6. **Lock ring**
7. **Cylinder headbolt, short**
8. **Cylinder headbolt, long**
9. **Cylinder head**
10. **Valve seat**
11. **Valve**

**Figure 3-36. Cylinder Head Assembly**

## CLEANING

1. Remove old gasket material from cylinder head. Do not cause scratches or nicks.

***NOTICE***

**Do not use glass or sand to bead blast surfaces exposed to engine oil. Blasting materials can lodge in pores of the casting. Heat expansion releases this material which can contaminate oil resulting in engine damage. (00534b)**

*NOTE*

*Bead blasting materials could enter threaded holes. This would adversely affect fastener engagement and torque indication. Cover all threaded holes before bead blasting.*

2. Remove all carbon deposits from combustion chamber and machined surfaces of cylinder head. Do not remove any metal material.
3. To soften stubborn deposits, soak the cylinder head in a chemical solution, such as GUNK HYDRO-SEAL or other carbon and gum dissolving agent. Repeat previous step as necessary.

*NOTE*

*Keep all parts grouped by location so they can be installed in the original location.*

4. Thoroughly clean the cylinder head, spring retainers, tapered keepers, valves and valve springs in a non-volatile cleaning solution or solvent. Follow up with a thorough wash in hot soapy water.

**⚠WARNING**

**Compressed air can pierce the skin and flying debris from compressed air could cause serious eye injury. Wear safety glasses when working with compressed air. Never use your hand to check for air leaks or to determine air flow rates. (00061a)**

5. Dry parts with low-pressure, compressed air.

## INSPECTION

| PART NUMBER | TOOL NAME |
|---|---|
| B-45525 | VALVE GUIDE HONE |
| HD-34751 | VALVE GUIDE CLEANING BRUSH |
| HD-42324-A | CYLINDER TORQUE PLATES |

### Cylinder Head

1. Check for scratches and nicks on all gasket sealing surfaces.
2. Using a straightedge, check gasket surface for warpage. Discard the head if warpage is 0.006 in (0.152 mm) or greater.

3. **Check for Warpage - Alternate Method**
   a. Use one of the CYLINDER TORQUE PLATES (Part No. HD-42324-A) instead the straightedge.
   b. Lay the upper plate (without vise grip step) flat on the machined surface of the head.
   c. If the plate rocks, the head is immediately suspect.
   d. Insert a feeler gauge between the plate and head at various locations.
   e. Discard the head if warpage is 0.006 in (0.152 mm) or greater.
4. Verify that all oil holes are clean and open.

## Valve Guides

1. Inspect external surfaces, particularly the combustion chamber side, for cracks. Replace if necessary.
2. Prepare valve guides for inspection.
   a. Lightly hone bore using the VALVE GUIDE HONE (Part No. B-45525).
   b. Scrub with the VALVE GUIDE CLEANING BRUSH (Part No. HD-34751) to remove any dust or debris.
   c. Polish the valve stem with fine emery cloth or steel wool to remove carbon buildup.
3. Check valve stem to guide clearance:
   a. Measure the **inside** diameter of the valve guide using a ball gauge.
   b. Measure the **outside** diameter of the valve stem with a micrometer.
   c. If the clearance between stem and guide exceeds the limits, the valve stem and/or guide are excessively worn. Refer to Table 3-36.
   d. Repeat measurements with a **new** valve to determine if the guide must be replaced.

**Table 3-36. Valve Stem to Guide Clearance Service Wear Limits**

| VALVE | IN | MM |
|---|---|---|
| Intake | 0.0038 | 0.0965 |
| Exhaust | 0.0038 | 0.0965 |

## Valves

1. Replace the valve if there is evidence of burning or cracking.
2. Inspect the end of the valve stem for pitting or uneven wear. Replace if necessary.
3. Inspect for burrs around the valve stem keeper groove. Remove burrs with a fine tooth file.
4. To determine if the valve stem is excessively worn, see valve guide inspection.

## Valve Springs

1. Inspect springs for cracked or discolored coils. Replace if necessary.
2. Set the valve springs on a level surface. Check for proper squareness.
3. Check free length of springs using a caliper. Load test using a commercially available valve spring tester. Replace springs if free length or compression force do not meet specifications. See 3.2 SPECIFICATIONS.

## Tapered Keepers

Install **new** keepers any time valves are installed.

## Valve Seats

1. Inspect seats for cracking, chipping or burning. Replace if necessary.
2. Check seats wear by measuring valve stem protrusion. See 3.20 CYLINDER HEAD, Valve and Seat Refacing.

# VALVE GUIDE REPLACEMENT

| PART NUMBER | TOOL NAME |
|---|---|
| B-45523 | VALVE GUIDE REAMER |
| B-45524-1 | VALVE GUIDE DRIVER |
| B-45524-2A | VALVE GUIDE INSTALLER SLEEVE |
| B-45525 | VALVE GUIDE HONE |
| HD-34751 | VALVE GUIDE CLEANING BRUSH |
| HD-39782-B | CYLINDER HEAD SUPPORT STAND KIT |
| HD-39786 | CYLINDER HEAD HOLDING FIXTURE |
| HD-39847 | REAMER T-HANDLE |
| HD-39964 | REAMER LUBRICANT |

## Removal

*NOTES*

- *If valve guide replacement is necessary, always install **new** guide before refacing valve seat.*
- *CYLINDER HEAD SUPPORT STAND KIT (Part No. HD-39782-B) makes sure that valve guide and seat are perpendicular. Not keeping cylinder head valve guide bore perpendicular results in damage during the press procedure.*

1. See Figure 3-37. Prepare cylinder head for valve guide replacement.
   a. Obtain CYLINDER HEAD SUPPORT STAND KIT (Part No. HD-39782-B).
   b. Insert sleeve of appropriate seat adapter (3 or 4) into tube at top of support stand (2).
   c. Position cylinder head with valve seat centered on seat adapter.

*NOTE*

*Always press valve guide toward combustion chamber. Carbon buildup on combustion chamber side of guide can damage cylinder head bore. This may prevent a proper interference fit.*

2. Remove and discard lock ring from valve guide groove.

NOTE

*Lock ring is present on original exhaust valve guides only and both intake and exhaust replacement guides.*

3. Insert VALVE GUIDE DRIVER (Part No. B-45524-1) (1) into valve guide bore.
4. See Figure 3-38. Center valve guide driver under ram of arbor press. Apply pressure until valve guide drops free of cylinder head. Discard valve guide.

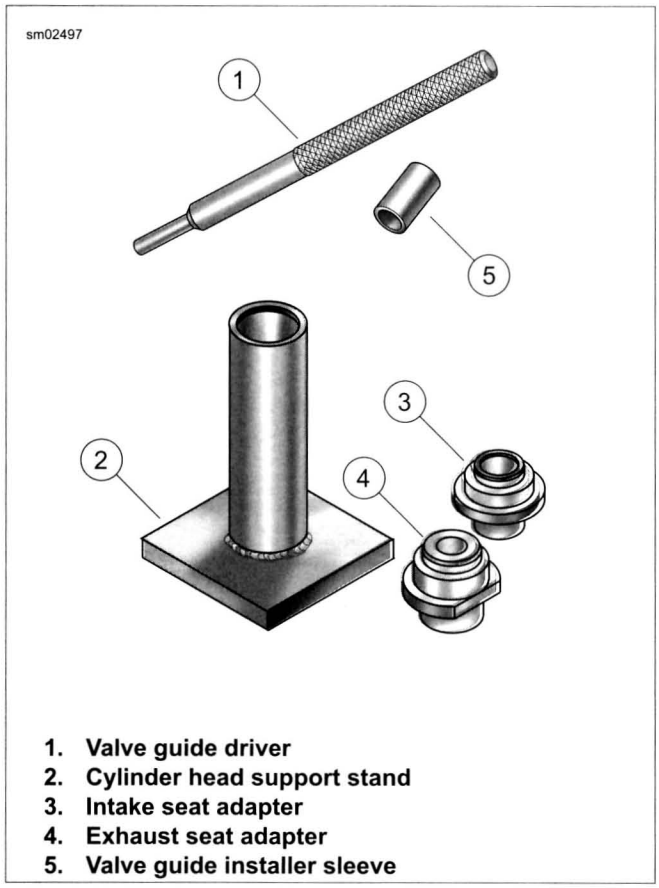


1. **Valve guide driver**
2. **Cylinder head support stand**
3. **Intake seat adapter**
4. **Exhaust seat adapter**
5. **Valve guide installer sleeve**

**Figure 3-37. Valve Guide Replacement Tools**

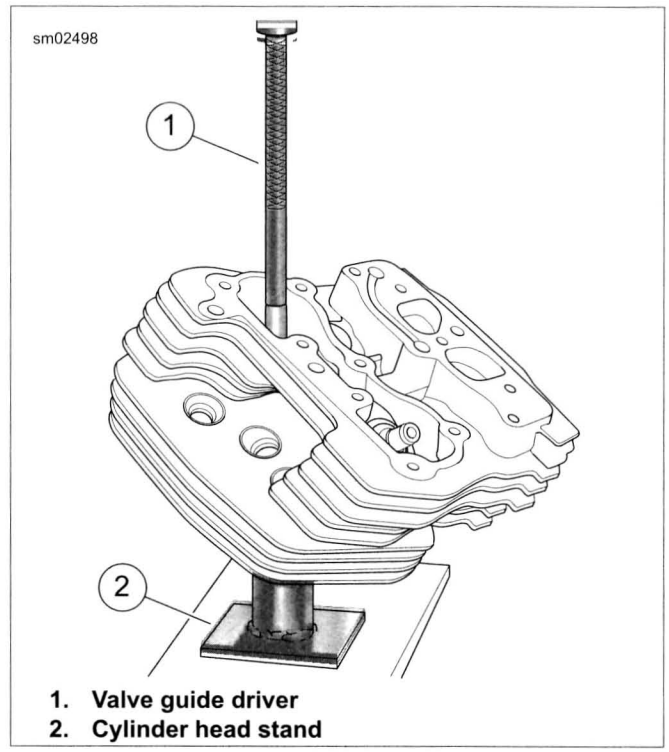


1. **Valve guide driver**
2. **Cylinder head stand**

**Figure 3-38. Remove Valve Guide**

## Installation

1. Check valve guide interference fit.
   a. Measure the outside diameter of a **new** standard valve guide.
   b. Measure the cylinder head valve guide bore. The valve guide should be 0.0020-0.0033 in (0.051-0.084 mm) larger than the bore.
   c. If interference is not within specification, select an oversize guide from an aftermarket supplier or replace the cylinder head.

NOTE

*Pressing out guide may remove material. Installing a larger size is not uncommon to provide proper interference fit.*

2. Select a guide that provides the correct interference fit.

NOTE

*The support stand provides support so the valve guide and seat are perpendicular.*

3. Prepare cylinder head for valve guide replacement.
   a. See Figure 3-37. Insert sleeve of the appropriate seat adapter (3 or 4) into tube at top of support stand (2). Position cylinder head with valve seat centered on seat adapter.
   b. Apply a thin film of petroleum jelly to external surface of valve guide.
   c. Start valve guide into bore.
   d. See Figure 3-39. Place VALVE GUIDE INSTALLER SLEEVE (Part No. B-45524-2A) (2) over valve guide. Insert valve guide driver (1) into sleeve.
   e. Center valve guide driver under ram of arbor press and apply pressure only until valve guide is started in bore. Then back off ram slightly to allow guide to center itself.

*NOTE*

*Always back off ram to allow the valve guide to find center. Pressing the guide into the cylinder head in one stroke can bend the driver, break the guide, distort the cylinder head casting or damage the cylinder head valve guide bore.*

   f. Verify that support stand (3) and driver (1) are square. Center driver under ram. Press valve guide further into bore, then back off ram again to allow valve guide to center itself.
   g. Repeat step until installer sleeve contacts machined area of cylinder head.
   h. Install **new** lock ring into valve guide groove. Verify that lock ring is square and fully seated in the groove.

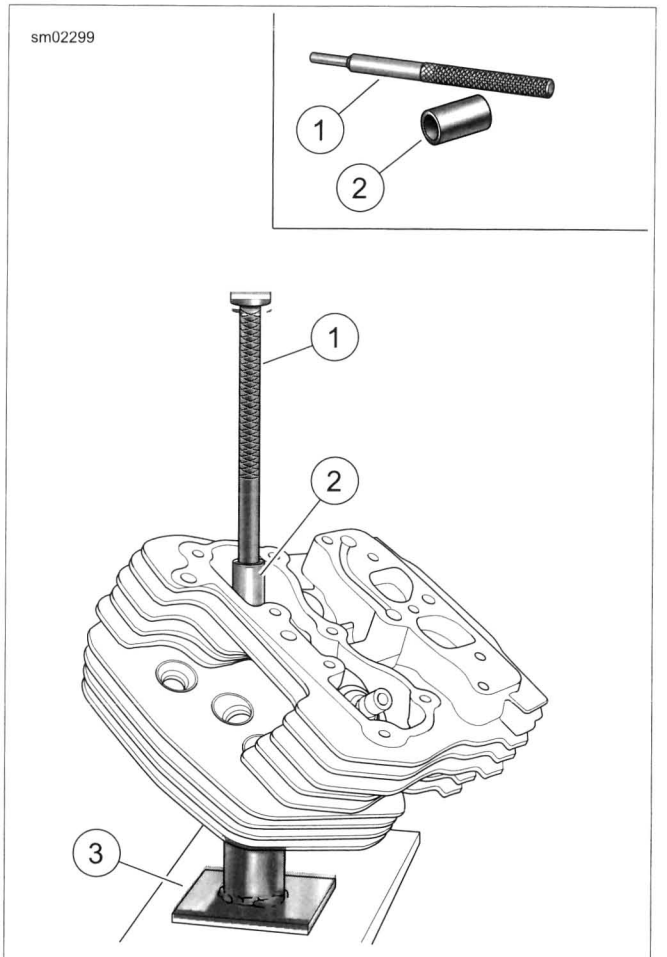


1. **Valve guide driver**
2. **Valve guide installer sleeve**
3. **Cylinder head stand**

**Figure 3-39. Install Valve Guide**

4. Secure cylinder head for service.
   a. Turn 12 mm end of CYLINDER HEAD HOLDING FIXTURE (Part No. HD-39786) into spark plug hole.
   b. Clamp tool in vise at a 45 degree angle or another comfortable working position.

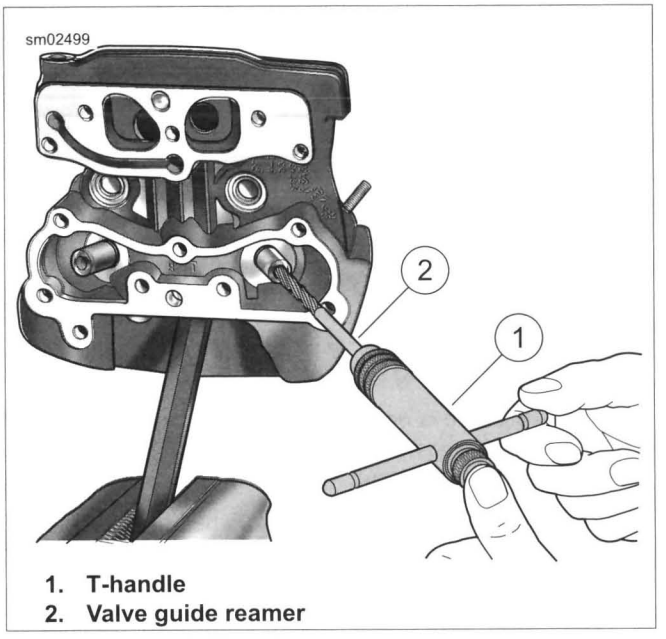


1. **T-handle**
2. **Valve guide reamer**

**Figure 3-40. Reaming Valve Guide Bore**

*NOTE*

*Valve guides are reamed to within 0.0005-0.0001 in (0.013-0.0025 mm) under finished size.*

5. See Figure 3-40. Ream the guide.
   a. Install REAMER T-HANDLE (Part No. HD-39847) (1) on VALVE GUIDE REAMER (Part No. B-45523) (2).
   b. Apply a liberal amount of REAMER LUBRICANT (Part No. HD-39964) to valve guide bore and reamer. Start reamer into bore.

   *NOTE*

   *Never turn reamer counterclockwise.*

   c. Apply slight pressure on reamer while rotating clockwise. Squirt additional lubricant onto reamer and into guide as necessary.

   *NOTE*

   *For best results, do not push reamer or apply pressure to the reamer handle. Excessive pressure results in a rough cut and the bore will be tapered if pressure is not centrally applied.*

   d. Continue rotating reamer T-handle until entire bit has passed through valve guide bore.
   e. Remove T-handle from reamer, and carefully draw out reamer through combustion chamber side of valve guide.

**⚠WARNING**

**Compressed air can pierce the skin and flying debris from compressed air could cause serious eye injury. Wear safety glasses when working with compressed air. Never use your hand to check for air leaks or to determine air flow rates. (00061a)**

6. Remove metal shavings with low-pressure, compressed air.
7. See Figure 3-41. Clean with the VALVE GUIDE CLEANING BRUSH (Part No. HD-34751).
8. See Figure 3-42. Hone bore to finished size.
   a. Install VALVE GUIDE HONE (Part No. B-45525) in a high-speed electric drill.
   b. Apply reamer lubricant to stones of hone and valve guide bore.
   c. Start stones of hone into bore.
   d. Rotate the hone while moving the stones through the entire length of the bore for 10-12 complete strokes. Work for a crosshatch pattern of approximately 60 degrees.
9. Remove debris with low-pressure, compressed air. Clean with the VALVE GUIDE CLEANING BRUSH (Part No. HD-34751).

*NOTE*

*Always check valve stem to valve guide clearance after honing.*

10. Check valve stem to valve guide clearance. Refer to Table 3-37. If the clearance is not within specification, repeat the honing process and recheck.

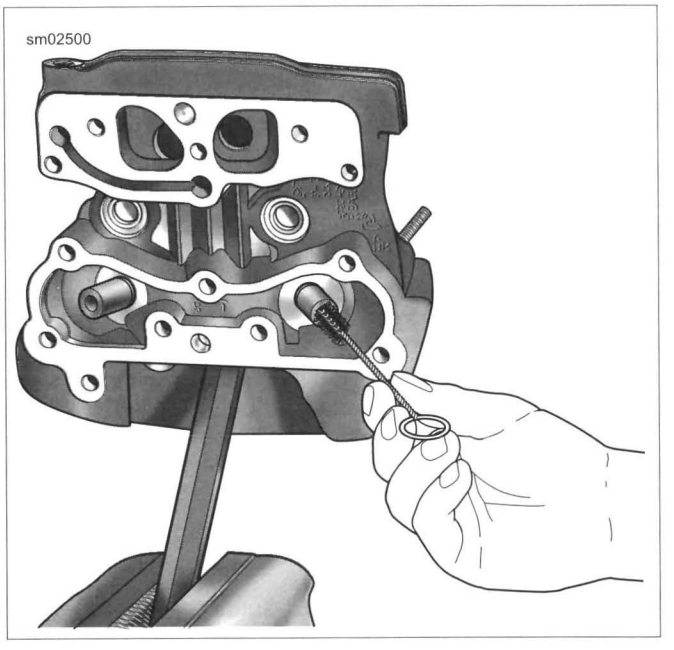


**Figure 3-41. Scrubbing Valve Guide Bore**

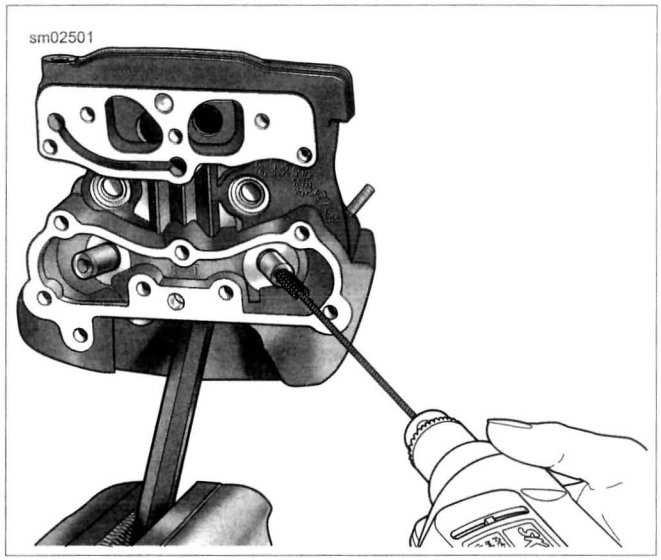


**Figure 3-42. Honing Valve Guide Bore**

11. Clean cylinder head assembly.
    a. Using cleaning solvent, thoroughly clean cylinder head and valve guide bore.
    b. Scrub valve guide bore with the VALVE GUIDE CLEANING BRUSH (Part No. HD-34751). For best results, clean the valve guide bore with the type of swabs or patches found in gun cleaning kits and a thin engine oil.
    c. Continue to wipe bore until a clean cloth shows no evidence of dirt or debris. Follow up with a thorough wash in hot soapy water.

**⚠WARNING**

**Compressed air can pierce the skin and flying debris from compressed air could cause serious eye injury. Wear safety glasses when working with compressed air. Never use your hand to check for air leaks or to determine air flow rates. (00061a)**

12. Dry parts with low-pressure, compressed air.

**Table 3-37. Valve Stem to Guide Clearance**

| VALVE | IN | MM |
|---|---|---|
| Intake | 0.001-0.003 | 0.0254-0.0762 |
| Exhaust | 0.001-0.003 | 0.0254-0.0762 |

## VALVE AND SEAT REFACING

| PART NUMBER | TOOL NAME |
|---|---|
| HD-34751 | VALVE GUIDE CLEANING BRUSH |
| HD-35758-C | NEWAY VALVE SEAT CUTTER SET |
| HD-39786 | CYLINDER HEAD HOLDING FIXTURE |

*NOTES*

- *Verify correct valve stem to valve guide clearance before refacing. If **new** guides must be installed, complete that task before refacing valve seats. Refer to Table 3-37.*
- *This procedure is not based on valve lapping. The result is an interference fit between the 45 degree valve face and the 46 degree valve seat.*

1. Remove carbon deposits from valve head, face and stem with a wire wheel. Do not remove any metal. Carbon left on stem may affect alignment during valve refacing.
2. Polish valve stem with steel wool or crocus cloth to remove marks left by wire wheel.
3. Grind valve face to a 45 degree angle using a valve grinding machine.

*NOTES*

- *Do not remove any more metal than necessary to clean up and true the valve face.*
- *See Figure 3-43. Replace the valve if margin (5) is less than 0.0313 in (0.795 mm).*

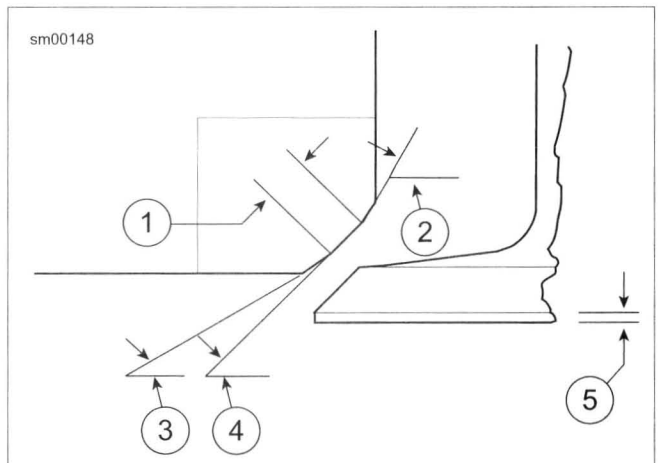


1. **0.040-0.062 in (1.016-1.575 mm)**
2. **60 degrees**
3. **31 degrees**
4. **46 degrees**
5. **Margin: 0.0313 in (0.795 mm) minimum**

**Figure 3-43. Valve and Seat Dimensions**

4. Wipe valve seats and valve faces clean. Install the valve into the valve guide. Push on head of valve until it contacts the valve seat.

5. See Figure 3-44. Measure valve stem protrusion.
   a. Use a dial caliper to check the distance from the top of the valve stem to the machined area on the cylinder head.
   b. If protrusion exceeds 2.069 in (52.553 mm), replace the valve, valve seat or cylinder head as necessary.

*NOTE*

*Do not shorten the valve by grinding the end of the stem. Grinding removes the hardened case which results in accelerated wear.*

6. Secure cylinder head for servicing.
   a. Turn 12 mm end of CYLINDER HEAD HOLDING FIXTURE (Part No. HD-39786) into spark plug hole.
   b. Securely clamp fixture in vise.
   c. Place cylinder head at a 45 degree angle or another comfortable working position.
7. To determine the correct location of the 46 degree valve seat in the head, measure the diameter of the valve head and subtract 0.080 in (2.032 mm) from that number.
8. Set the dial caliper to the calculated measurement and lock down for quick reference. This is the diameter of the valve seat.
9. Use a permanent marker to highlight the valve seat area. Highlight all three angles. Allow marker to dry before proceeding.

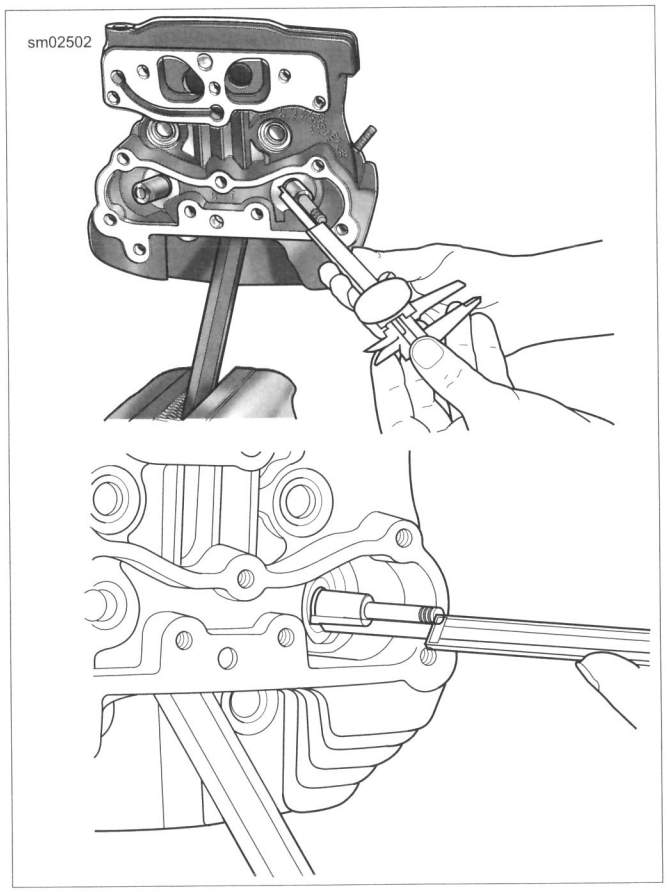


**Figure 3-44. Checking Valve Stem Protrusion**

*NOTES*

- *Always verify that cutter blades and cutter pilot are clean before beginning the cutting process. The correct cleaning brush is supplied with the Neway tool set.*
- *Always verify that the inside of the valve guide is clean by using VALVE GUIDE CLEANING BRUSH (Part No. HD-34751).*

10. See Figure 3-45. Obtain the NEWAY VALVE SEAT CUTTER SET (Part No. HD-35758-C). Choose the cutter pilot that fits properly into the valve guide hole. Securely seat the pilot by pushing down and turning using the installation tool supplied in the tool set.
11. Choose the proper 46 degree cutter (intake or exhaust) and gently slide the cutter onto the pilot. Do not drop the cutter onto the seat.
12. While applying a constant and consistent pressure, remove only enough metal to provide a uniform finish and to remove pitting.

*NOTES*

- *If the width of the clean-up cut is greater on one side of the seat than the other, the guide may require replacement due to improper installation.*
- *If a groove cut completely around the seat is apparent, slightly stagger the blades of the cutter.*

13. Measure the 46 degree cut at the outermost edge at the widest point of the circle to determine what cut will be made next.
   a. If the outer diameter is too large, use the 31 degree cutter to lower the valve seat.
   b. If the outer diameter is too small, use the 46 degree cutter to widen the valve seat or move it away from the port.

*NOTES*

- *Because the OD measurement of the valve seat is used as a reference point, it will usually be necessary to use the 31 degree cutter following the initial 46 degree cut.*
- *Always highlight the valve seat with the permanent marker in order to better view the location of the 46 degree valve seat.*

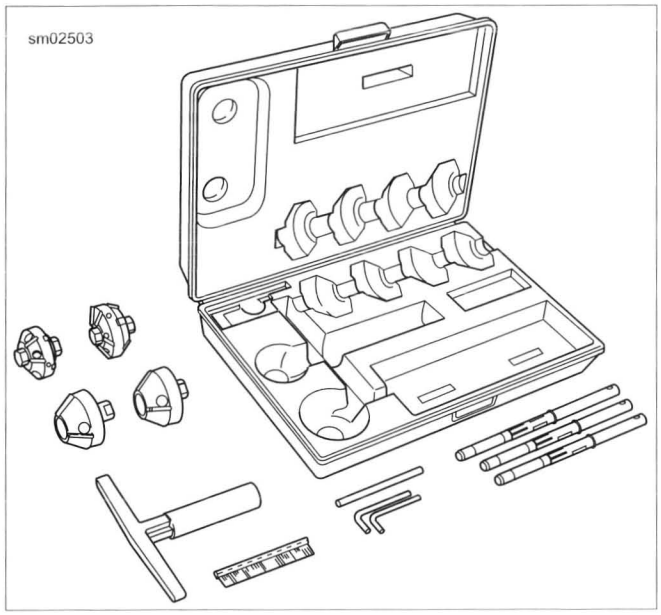


**Figure 3-45. Neway Valve Seat Cutter Set**

14. If the location of the valve seat is not correct, repeat steps 9 through 13.
15. When a complete clean-up of the 46 degree angle is accomplished and the width is at least 0.062 in (1.575 mm), proceed to the next step.
16. Select the proper 60 degree cutter and gently slide the cutter down the cutter pilot to the valve seat.
17. Remove just enough material to provide an even valve seat width of 0.040-0.062 in (1.016-1.575 mm).
18. Remove cutter and cutter pilot. Clean cuttings from seat area.
19. Insert valve into the cylinder head. Use thumb pressure against valve to hold it closed.
20. Completely fill the port with solvent to verify proper seal between valve and valve seat.

*NOTE*

*Hold pressure against the valve for a minimum of 10 seconds. If any leakage occurs, examine the valve and valve seat for irregularities or defects. If necessary, repeat the above valve grinding or valve seat cutting process.*

21. Repeat the process on any valve seat that needs service.
22. Clean valves, cylinder head and valve seats in solvent. Follow up with a thorough wash in hot soapy water.

**⚠WARNING**

**Compressed air can pierce the skin and flying debris from compressed air could cause serious eye injury. Wear safety glasses when working with compressed air. Never use your hand to check for air leaks or to determine air flow rates. (00061a)**

23. Dry parts with low-pressure, compressed air.

## ASSEMBLY

| PART NUMBER | TOOL NAME |
|---|---|
| HD-34736-B | VALVE SPRING COMPRESSOR |
| HD-34751 | VALVE GUIDE CLEANING BRUSH |
| HD-39786 | CYLINDER HEAD HOLDING FIXTURE |

1. Secure cylinder head for service.
   a. Turn 12 mm end of CYLINDER HEAD HOLDING FIXTURE (Part No. HD-39786) into spark plug hole.
   b. Clamp tool in vise at a 45 degree angle or another comfortable working position.

*NOTE*

*At the time of disassembly, all parts should have been marked or tagged so that they are installed on the same valve (and in the same head).*

2. Run the VALVE GUIDE CLEANING BRUSH (Part No. HD-34751) through the valve guide bore to verify cleanliness.
3. Apply a liberal amount of SCREAMIN' EAGLE ASSEMBLY LUBE to valve stem.
4. Install the valve into the cylinder head.
5. To distribute the assembly lube evenly around the valve stem and guide, spin the valve as it is installed. Work the valve back and forth in the bore to verify that it slides smoothly and seats properly.
6. Remove the valve and apply a second coat of SCREAMIN' EAGLE ASSEMBLY LUBE to the valve stem. Install the valve.

***NOTICE***

**Failure to install plastic capsule can cause the valve stem seal to catch the edge of the valve stem keeper groove. The resulting damage can cause leakage around the valve stem, excessive oil consumption and valve sticking. (00535b)**

7. See Figure 3-46. Hold valve against the valve seat. Slide plastic capsule over valve stem tip and keeper groove.
8. Apply a very thin film of SCREAMIN' EAGLE ASSEMBLY LUBE to capsule.
9. See Figure 3-47. Slide **new** valve stem seal assembly over capsule and down valve stem until seated against cylinder head casting. Remove capsule from valve stem tip.

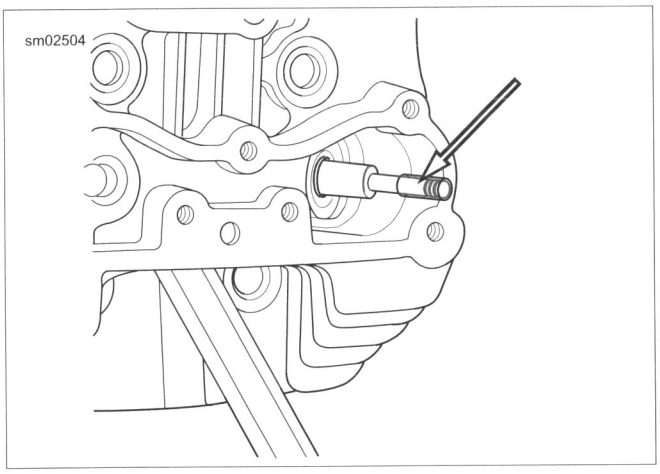


**Figure 3-46. Plastic Capsule**

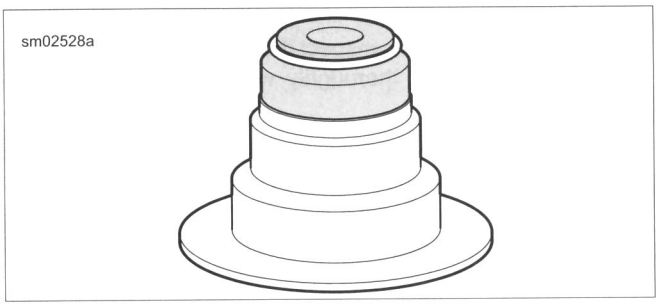


**Figure 3-47. Valve Stem Seal Assembly**

10. See Figure 3-48. Apply a liberal amount of SCREAMIN' EAGLE ASSEMBLY LUBE to valve stem tip and keeper groove.
11. With the smaller diameter coils topside, install the valve spring (3). Place the spring retainer (2) on top of the valve spring.
12. Install keepers:
    a. Place VALVE SPRING COMPRESSOR (Part No. HD-34736-B) over cylinder head so that the blunt end is centered on the valve head and adapter is seated on the valve spring retainer.
    b. Rotate forcing screw to compress valve spring.

*NOTE*

*For best results, apply a dab of grease to the inboard side of the keepers before installation and use a magnetic rod for easy placement.*

    c. With the tapered side down, fit the keepers into the valve stem groove.
    d. Arrange tapered keepers so that the gaps are evenly spaced. Release valve spring compression.
13. Tap the end of the valve stem once or twice with a soft mallet to make sure that tapered keepers are tightly seated.
14. Install the other valve and components.
15. Release the cylinder head holding fixture from the vise. Remove fixture tool from spark plug hole.
16. Cover the cylinder head to protect it from dust and dirt until time of installation.

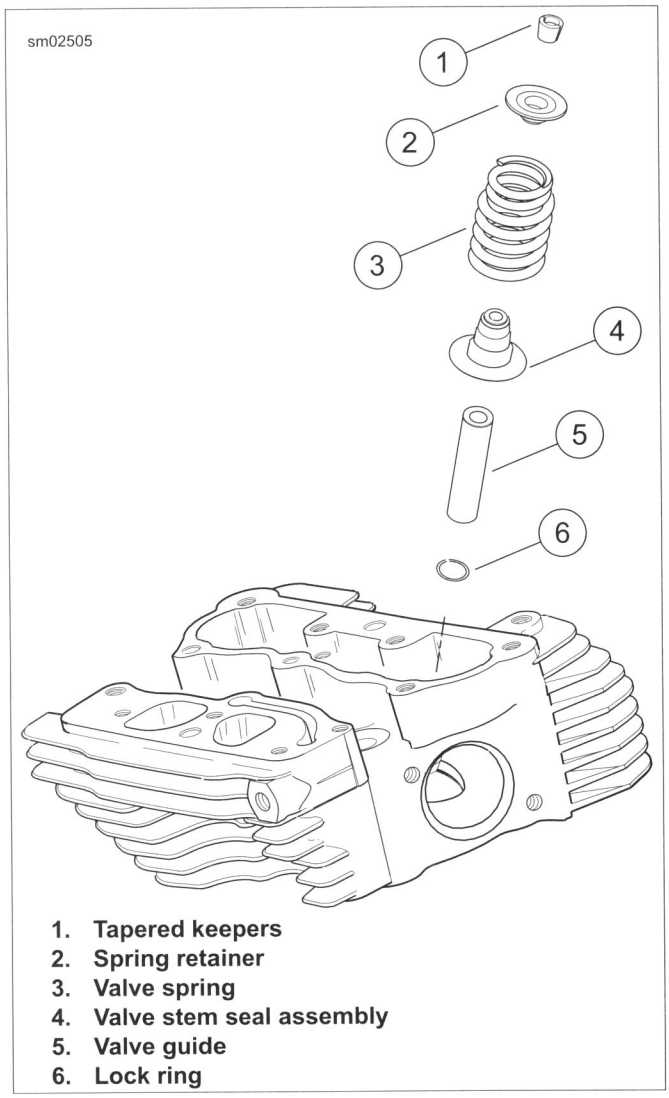


1. **Tapered keepers**
2. **Spring retainer**
3. **Valve spring**
4. **Valve stem seal assembly**
5. **Valve guide**
6. **Lock ring**

**Figure 3-48. Valve Assembly**

## CLEANING

1. See Figure 3-49. Clean all remaining cylinder head gasket material from the cylinder (3).

**⚠WARNING**

**Compressed air can pierce the skin and flying debris from compressed air could cause serious eye injury. Wear safety glasses when working with compressed air. Never use your hand to check for air leaks or to determine air flow rates. (00061a)**

2. Clean cylinder in a non-volatile cleaning solution or solvent. Dry parts with low-pressure, compressed air. Verify that all oil holes are clean and open.
3. Inspect the cylinder bore for obvious defects or damage in the ring travel area. Replace cylinders that are severely scored, scuffed, scratched, burnt or gouged.
4. Use a file to carefully remove any nicks or burrs from the machined surfaces of the cylinder.

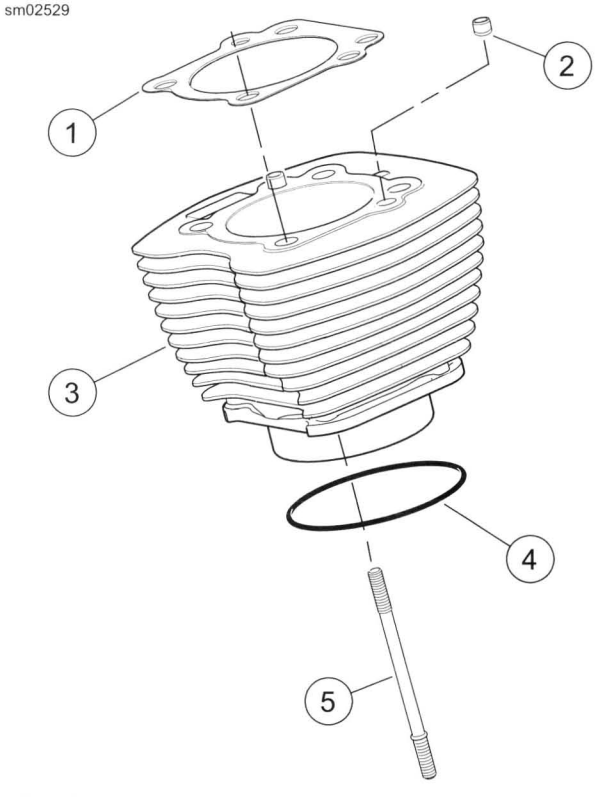


1. **Cylinder head gasket**
2. **Dowel pin**
3. **Cylinder**
4. **O-ring seal**
5. **Cylinder stud**

**Figure 3-49. Cylinder Assembly**

## INSPECTION

| PART NUMBER | TOOL NAME |
|---|---|
| HD-42324-A | CYLINDER TORQUE PLATES |
| TA360 | SNAP-ON TORQUE ANGLE GAUGE |

| FASTENER | TORQUE VALUE | |
|---|---|---|
| Cylinder torque plate bolts, first torque | 120-144 **in-lbs** | 13.6-16.3 Nm |
| Cylinder torque plate bolts, second torque | 15-17 ft-lbs | 20.3-23.0 Nm |
| Cylinder torque plate bolts, final torque | 90 degrees | 90 degrees |

1. Using dye penetrant, inspect the cylinder for cracks. If no cracks are found, thoroughly wash cylinder to remove traces of dye.
2. See Figure 3-50. Check the machined surfaces for flatness using a feeler gauge and CYLINDER TORQUE PLATES (Part No. HD-42324-A).
   a. Lay gasket side of the upper plate (3) flat against the head gasket surface of the cylinder.
   b. Check if the plate rocks. If the plate rocks, the head is immediately suspect.
   c. Insert a feeler gauge between the plate and cylinder at various locations.
   d. The head gasket surface must be flat within 0.006 in (0.15 mm).
   e. Lay the seal side of the lower plate (2) flat against the O-ring seal surface. Check flatness using a feeler gauge.
   f. The O-ring seal surface must be flat within 0.004 in (0.102 mm).
   g. Replace the cylinder and piston if either surface exceeds specification.

*NOTE*

*Failure to use cylinder torque plates can produce measurements that vary by as much as 0.001 in (0.025 mm). This may result in the use of parts that are unsuitable for service.*

3. Install CYLINDER TORQUE PLATES (Part No. HD-42324-A).
   a. Remove O-ring seal from cylinder sleeve, if installed.
   b. See Figure 3-51. Clamp the stepped side of the lower plate in a vise with soft jaws.
   c. Lightly oil threads and shoulders of four bolts (1) with clean engine oil and slide through holes of lower plate (2).
   d. Slide cylinder onto bolts with the indent in the cooling fins facing upward.
   e. Place a used head gasket on cylinder. Install upper plate with blind holes aligned with dowel pins in cylinder. Secure with bolts (1).
   f. See Figure 3-52. Tighten the bolts to 120-144 **in-lbs** (13.6-16.3 Nm) in the sequence shown.
   g. Following the same sequence, tighten each bolt to 15-17 ft-lbs (20.3-23.0 Nm).
   h. Final-tighten each bolt an additional 90 degrees (90 degrees) in the same sequence.

*NOTE*

*For best results use SNAP-ON TORQUE ANGLE GAUGE (Part No. TA360). If the tool is not available, mark a straight line on each bolt head continuing the line onto the lower plate.*

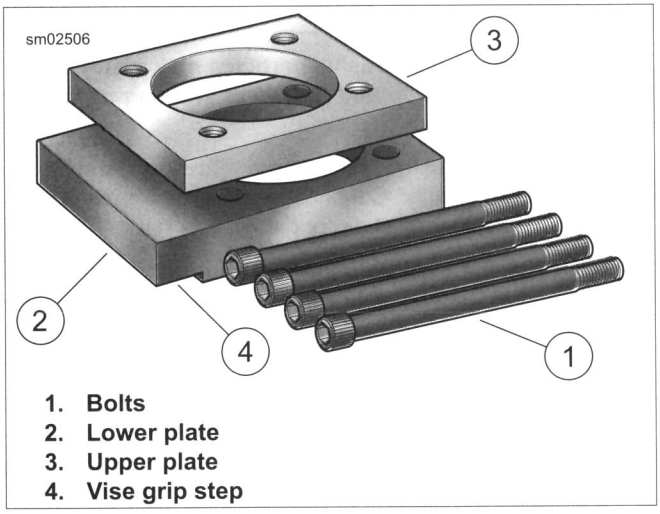


1. **Bolts**
2. **Lower plate**
3. **Upper plate**
4. **Vise grip step**

**Figure 3-50. Cylinder Torque Plates**

*NOTE*

*Maximum cylinder wear occurs at the top of top ring travel. Minimum wear occurs below ring travel. Always take measurements in both areas.*

4. Using an inside micrometer or dial bore gauge, check cylinder bore for out-of round and taper:
   a. At the top of the piston ring travel zone, measure the cylinder diameter parallel and perpendicular to the crankshaft. Record the readings.
   b. Repeat the measurements at the center of the piston ring travel zone and again at a point below the piston ring travel zone.
   c. See 3.3 SERVICE WEAR LIMITS. If the measurements are not within specification, the cylinder must be rebored and honed to accept the next standard oversize piston. See 3.21 CYLINDER, Boring and Honing Cylinder.
   d. If cylinders are not scuffed, scored or worn beyond the service limits, see 3.21 CYLINDER, Deglazing Cylinder.

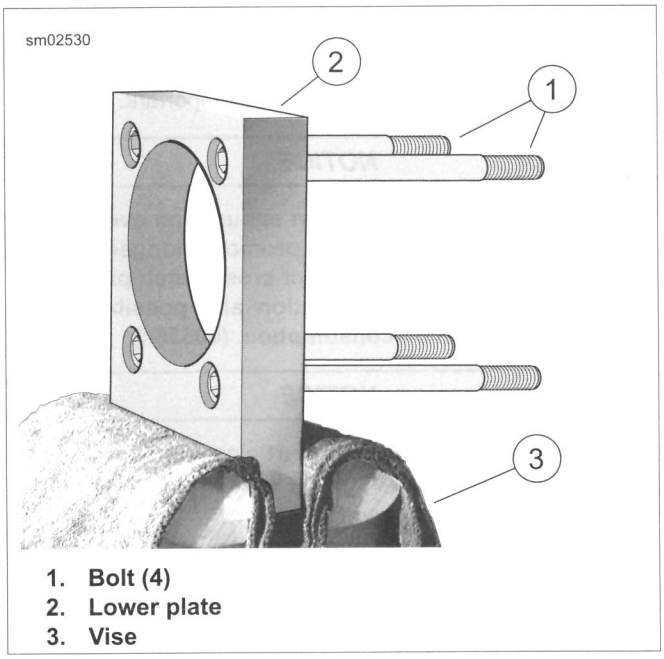


1. **Bolt (4)**
2. **Lower plate**
3. **Vise**

**Figure 3-51. Attaching Cylinder Torque Plates**

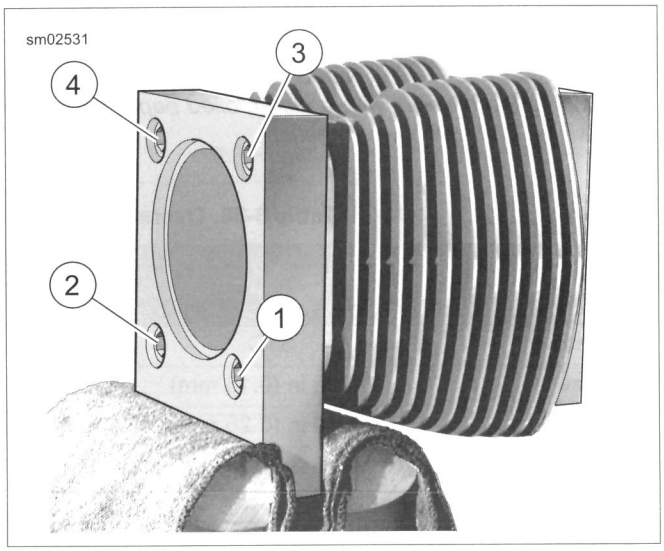


**Figure 3-52. Cylinder Torque Plate Bolt Sequence**

## DEGLAZING CYLINDER

*NOTE*

*Deglazing removes wear patterns, minor scuff marks and scratches without enlarging the bore diameter.*

1. Lightly swab the cylinder bore with a cloth dipped in clean engine oil.
2. Obtain a 240 grit flexible ball-type deglazing tool with a bristle tip or finishing stone able to produce a 60 degree crosshatch pattern.
3. Install the deglazing tool in a slow-speed drill. The speed at which the tool rotates determines the speed at which it must be stroked up and down the bore to produce the 60 degree crosshatch pattern.
4. Starting at the bottom of the cylinder, move the deglazing tool up and down the entire length of the cylinder bore for 10 to 12 complete strokes.
5. Stop frequently to examine the cylinder bore and/or take measurements. A precise 60 degree crosshatch pattern in the piston travel area is the most important.

***NOTICE***

**The angular crosshatch pattern ensures an even flow of oil onto the cylinder walls and promotes longer cylinder, piston and ring life. An incorrect cross hatch pattern will result in insufficient oil retention and possible piston seizure and/or high oil consumption. (00536c)**

***NOTICE***

**Failure to remove all abrasive particles may result in premature cylinder, piston and ring wear and engine failure. (00537c)**

6. Thoroughly wash the cylinder bore with liquid dishwashing soap and hot water. Continue cleaning until a clean cloth shows no evidence of dirt or debris.
7. Hot rinse the cylinder and dry with moisture free compressed air. Immediately apply a thin film of clean engine oil to a clean white paper towel and thoroughly wipe the inside of the cylinder to prevent the cylinder bore from rusting.

*NOTE*

*After wiping the cylinder with a clean, oiled paper towel, the towel will be dark with contamination.*

8. Repeat wiping process until a **new** towel remains white.
9. With the cylinder at room temperature, check the piston clearance in the cylinder in which the piston will run. See 3.22 PISTON, Inspection.

## BORING AND HONING CYLINDER

1. Bore cylinder with gaskets and torque plates attached. Bore the cylinder to 0.003 in (0.08 mm) under the desired finished size. Refer to Table 3-38 or Table 3-39.

***NOTICE***

**An incorrect crosshatch pattern or too fine a hone will result in insufficient oil retention and possible piston seizure and/or high oil consumption. (00538c)**

2. Honing the cylinder:
   a. Hone the cylinder to its finished size using a 280 grit rigid hone followed by a 240 grit flexible ball hone.
   b. Honing must be done with the torque plates attached.
   c. All honing must be done from the bottom (crankcase) end of the cylinder. Work for a 60 degree crosshatch pattern.
3. Stop frequently to examine the cylinder bore and/or take measurements.

***NOTICE***

**Failure to remove all abrasive particles may result in premature cylinder, piston and ring wear and engine failure. (00537c)**

4. Thoroughly wash the cylinder bore with liquid dishwashing soap and hot water. Continue cleaning until a clean cloth shows no evidence of dirt or debris.
5. Hot rinse the cylinder and dry with moisture free compressed air. Immediately apply a thin film of clean engine oil to a clean white paper towel. Thoroughly wipe the inside of the cylinder to prevent the cylinder bore from rusting.

*NOTE*

*After wiping the cylinder with a clean, oiled paper towel, the towel will be dark with contamination.*

6. Repeat wiping process until a **new** towel remains white.
7. With the cylinder at room temperature, check the piston clearance in the cylinder in which the piston will run. See 3.22 PISTON, Inspection.

**Table 3-38. Oversize Pistons and Cylinder Bores, Twin Cam 96**

| PISTON | | CYLINDER BORE FINISHED SIZE | |
|---|---|---|---|
| TYPE | SIZE | MINIMUM | MAXIMUM |
| Standard | STD | 3.7500 in (95.250 mm) | 3.7505 in (95.263 mm) |
| Oversize | 0.005 in (0.13 mm) | 3.7550 in (95.377 mm) | 3.7555 in (95.390 mm) |
| | 0.010 in (0.25 mm) | 3.7600 in (95.504 mm) | 3.7605 in (95.517 mm) |

Table 3-39. Oversize Pistons and Cylinder Bores, Twin Cam 103

| PISTON | | CYLINDER BORE FINISHED SIZE | |
|---|---|---|---|
| TYPE | SIZE | MINIMUM | MAXIMUM |
| Standard | STD | 3.8750 in (98.425 mm) | 3.8755 in (98.438 mm) |
| Oversize | 0.010 in (0.25 mm) | 3.8850 in (98.679 mm) | 3.8855 in (98.692 mm) |

## DISASSEMBLY

| PART NUMBER | TOOL NAME |
|---|---|
| SNAP-ON PRS8 | PISTON RING EXPANDER |

### Piston Rings

**⚠WARNING**

**Wear safety glasses or goggles when removing or installing compression rings. Compression rings can slip from the pliers and could be propelled with enough force to cause serious eye injury. (00469c)**

1. See Figure 3-53. Carefully remove top (7) and second (6) compression rings using PISTON RING EXPANDER (Part No. Snap-on PRS8).
2. Remove top and bottom oil rails (4) with fingers. Remove the oil rail expansion ring (5).
3. Discard the piston rings.

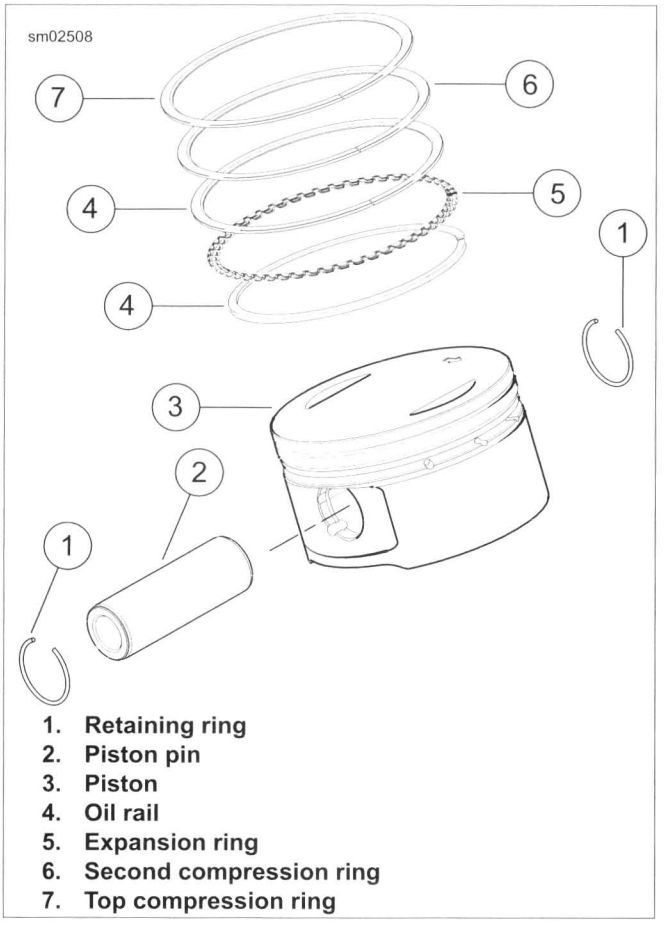


1. **Retaining ring**
2. **Piston pin**
3. **Piston**
4. **Oil rail**
5. **Expansion ring**
6. **Second compression ring**
7. **Top compression ring**

**Figure 3-53. Piston Assembly**

## CLEANING

1. Remove all combustion deposits by soaking the pistons in hot water with dishwashing liquid or a cleaner designed to remove carbon and which does not corrode aluminum. Follow the manufacturer's instructions when using these cleaners.

**⚠WARNING**

**Compressed air can pierce the skin and flying debris from compressed air could cause serious eye injury. Wear safety glasses when working with compressed air. Never use your hand to check for air leaks or to determine air flow rates. (00061a)**

*NOTE*

*Do not sandblast or glass bead blast pistons. Bead blasting rounds off ring lands. This results in oil contamination leading to accelerated wear.*

2. Thoroughly rinse the pistons. Dry with moisture-free, compressed air.
3. Clean the oil drain holes in the oil control ring groove. Run a small bristle brush through the passageways. Do not damage or enlarge the holes. Do not use a wire brush.
4. Verify that all oil holes are clean and open.

*NOTE*

*Avoid scratching the sides of the piston ring grooves.*

5. Thoroughly clean the three piston ring grooves of all carbon deposits. A portion of a compression ring properly ground to a sharp chisel-like edge works well for this purpose.

## INSPECTION

1. Using dye penetrant, inspect the piston for surface cracks. Particularly examine the area around the pin bores, ring lands and oil drain holes beneath the piston crown. If no cracks are found, thoroughly wash piston to remove traces of dye.
2. See Figure 3-54. Check piston pin. Pin must slide without binding.
   a. Insert a lightly oiled good piston pin into the piston pin bore to feel for the proper fit. The pin should slide in and out without binding, pivoting or rocking.
   b. Measure pin and pin bore diameters to determine running clearance. Replace piston and/or pin if clearance exceeds 0.0008 in (0.020 mm).

*NOTE*

*Pistons with superficial wear marks, minor scratching or mild scoring are acceptable for use.*

3. Carefully inspect the pistons for damage or excessive wear. Discard if any of the following conditions are found:
   a. Cracked, worn or bent ring lands
   b. Cracks, gouges, deep scratches or heavy scoring
   c. Evidence of burning, etching or melting
   d. Marks or imprints caused by contact with valves
4. Feel for dings, nicks or burrs around the edge of the piston crown. Lightly file to remove any defects.

*NOTE*

*Worn ring grooves result in high oil consumption and blow-by of exhaust gases. Blow-by of exhaust gases contaminate the engine oil supply with acids and leaves sludge in the crankcase. It also reduces engine efficiency by weakening the combustion seal necessary for efficient transfer of energy to the piston.*

5. See Figure 3-55. Measure piston ring side clearance.
   a. Insert the edge of a **new** ring into the piston ring groove. Insert a feeler gauge between the upper surface of the ring and the ring land.
   b. Since the grooves wear unevenly, repeat this check at several locations around the piston groove circumference.
   c. Discard the piston if the side clearance of either compression ring exceeds 0.0045 in (0.11 mm).
   d. Discard the piston if the oil control ring side clearance exceeds 0.010 in (0.25 mm).

*NOTES*

- *Check the piston clearance in the cylinder in which the piston will run. The cylinder must be deglazed and have torque plates installed when measuring bore.*
- *This inspection is very heat-sensitive. Both the piston and cylinder must be at room temperature before proceeding. Do not check piston running clearance immediately after honing or deglazing cylinder. Even holding the piston for too long can cause measurements to vary by as much as 0.0002 in (0.0051 mm).*
- *See upper frame of Figure 3-56. The coating has an oval-shaped opening (1) on each side of the piston for proper micrometer placement.*
- *See lower frame of Figure 3-56. The oval openings are too small for a standard flat anvil micrometer. Use a blade or ball anvil style micrometer to measure piston.*

6. See Figure 3-56. Measure running clearance of pistons:
   a. Measure the piston skirt at the bare aluminum openings (1) in the coating. Transfer that measurement to dial bore gauge.
   b. Mark the top, middle and bottom of the piston ring travel zone in the cylinder bore. Measure at markings in cylinder parallel and perpendicular to crankshaft.
   c. Replace piston and/or cylinder if running clearance exceeds 0.003 in (0.076 mm).

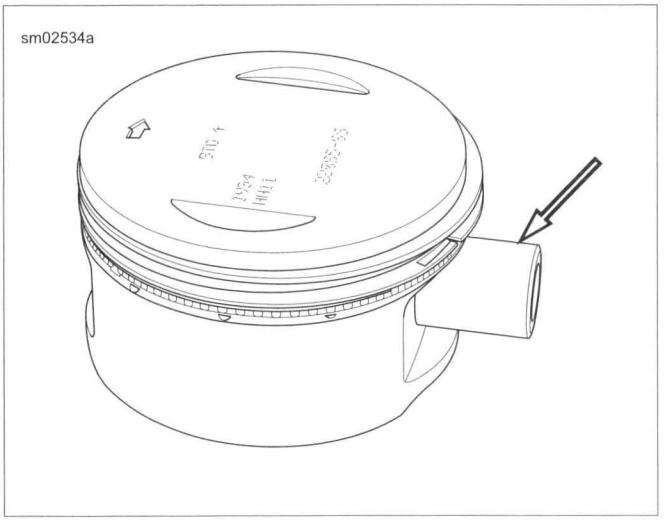


**Figure 3-54. Piston Pin Clearance**

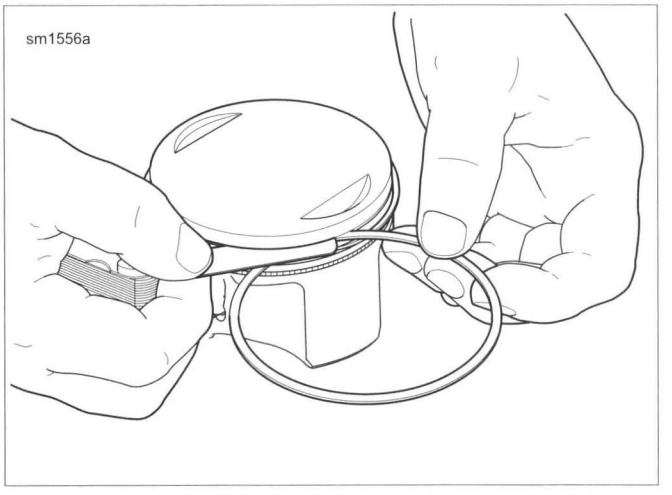


**Figure 3-55. Measuring Ring Clearance in Groove**

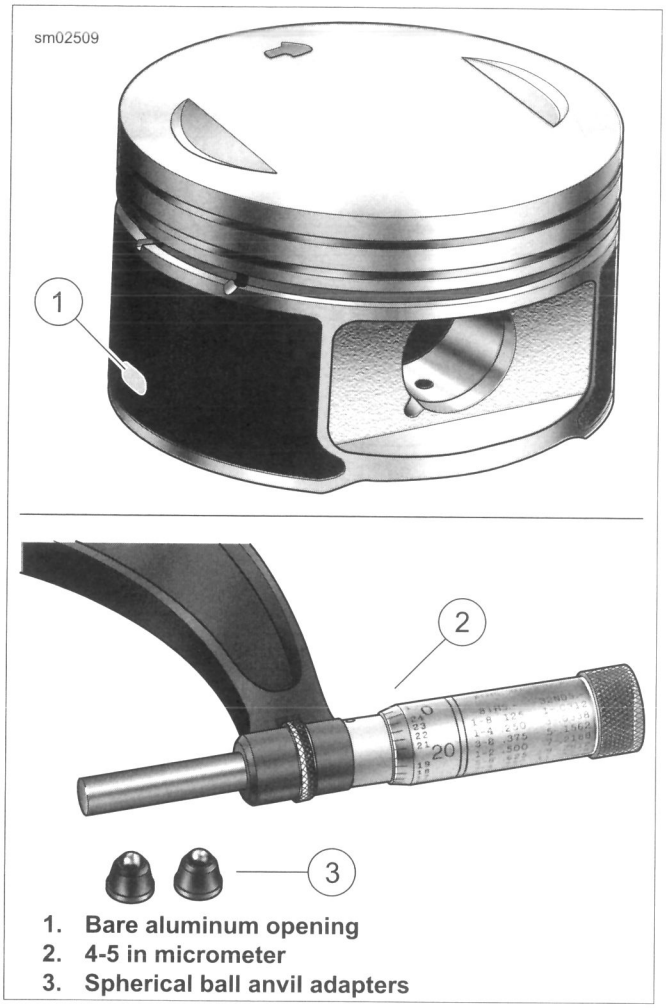


1. **Bare aluminum opening**
2. **4-5 in micrometer**
3. **Spherical ball anvil adapters**

**Figure 3-56. Measuring Running Clearance of Piston**

## ASSEMBLY

| PART NUMBER | TOOL NAME |
|---|---|
| SNAP-ON PRS8 | PISTON RING EXPANDER |

### Checking Piston Ring Gap

*NOTES*

- *Always use **new** piston rings. Piston rings take a definite set and must not be reused if the engine has been operated. Always deglaze (or hone) the cylinder before installing **new** rings.*
- *Insufficient ring gap may cause the ends to abut at operating temperatures. This will result in ring breakage, cylinder scuffing and/or piston seizure.*
- *Excessive ring gap results in high oil consumption and blow-by of exhaust gases. Blow-by contaminates the oil supply and leaves sludge in the crankcase. It also reduces engine efficiency by weakening the combustion seal necessary for efficient transfer of energy to the piston.*

1. See Figure 3-57. Check end gap of each ring before placing on the piston.
   a. Insert the **new** ring into the cylinder and square it in the bore using the top of the piston.
   b. Measure the ring end gap with a feeler gauge. Refer to Table 3-40.

**⚠WARNING**

**Compressed air can pierce the skin and flying debris from compressed air could cause serious eye injury. Wear safety glasses when working with compressed air. Never use your hand to check for air leaks or to determine air flow rates. (00061a)**

*NOTE*

*Ring end gap dimensions also apply to oversize rings. Replace ring if end gap exceeds specification. If end gap is under specification, filing is permissible.*

2. Use low-pressure, compressed air to remove any dirt or dust that may have settled in the oil drain holes and piston ring grooves.

**Table 3-40. Piston Ring End Gap: Twin Cam 96/103**

| PISTON RING | IN | MM |
|---|---|---|
| Top compression | 0.012-0.022 | 0.305-0.559 |
| Second compression | 0.015-0.025 | 0.381-0.635 |
| Oil control | 0.010-0.050 | 0.254-1.270 |

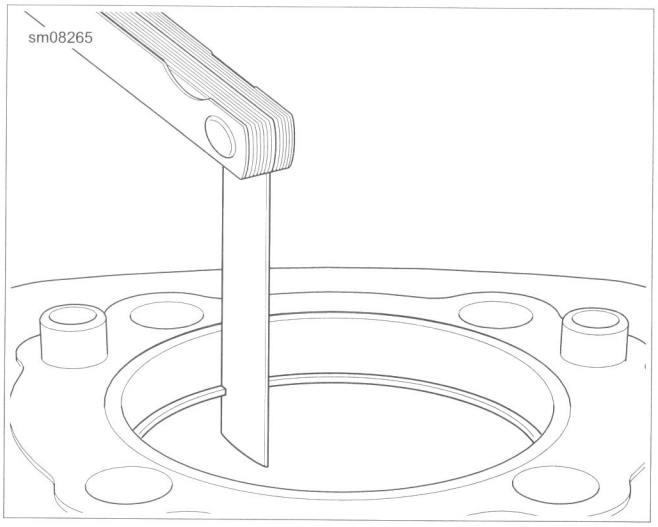


**Figure 3-57. Measuring Ring Gap**

### Installing Piston Rings

1. See Figure 3-58. Apply clean engine oil to three piston ring grooves.
2. Install expansion ring (4) into third ring groove.
3. Spiral bottom oil rail (5) into space below expansion ring (4). Position gap 90 degrees from the gap in the expansion ring.
4. Spiral top oil rail (3) into space above expansion ring (4). Position gap 180 degrees from the gap in the bottom oil rail.

**⚠WARNING**

**Wear safety glasses or goggles when removing or installing compression rings. Compression rings can slip from the pliers and could be propelled with enough force to cause serious eye injury. (00469c)**

*NOTES*

- *Use the proper piston ring spreader to prevent excessive ring twist and expansion. Over expansion may cause the ring to crack.*
- *Installing the second compression ring upside down will cause oil to be scraped up into the combustion chamber. This will result in increased oil consumption and lower service life on valves and other components.*

5. Using PISTON RING EXPANDER (Part No. Snap-on PRS8), carefully install the second compression ring. Make sure the dot (punch mark) near the ring gap faces the piston crown. Rotate the ring so the gap is 180 degrees from the gap in the oil expansion ring.
6. Install the top compression ring. Make sure the dot (punch mark) near the ring gap faces the piston crown. Rotate the ring so the gap is 180 degrees from the gap in the second compression ring.
7. Rotate the three piston rings using the palms of both hands. The rings must rotate freely.
8. See Figure 3-59. Verify that the ring gaps are still properly staggered.

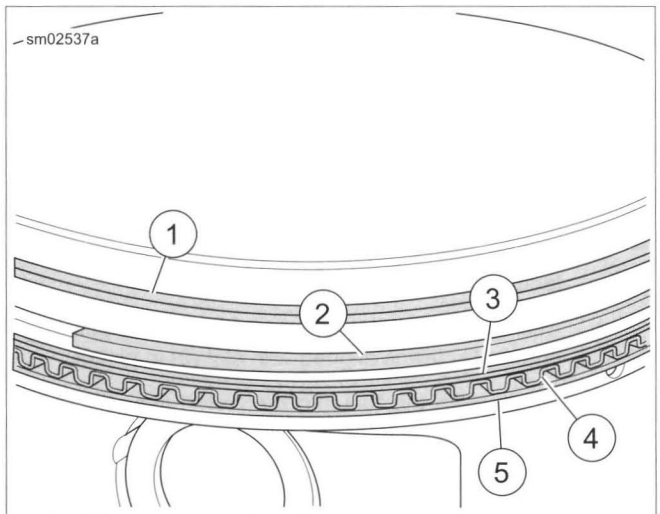


1. **Top compression ring**
2. **Second compression ring**
3. **Top oil rail**
4. **Expansion ring**
5. **Bottom oil rail**

**Figure 3-58. Piston Rings**

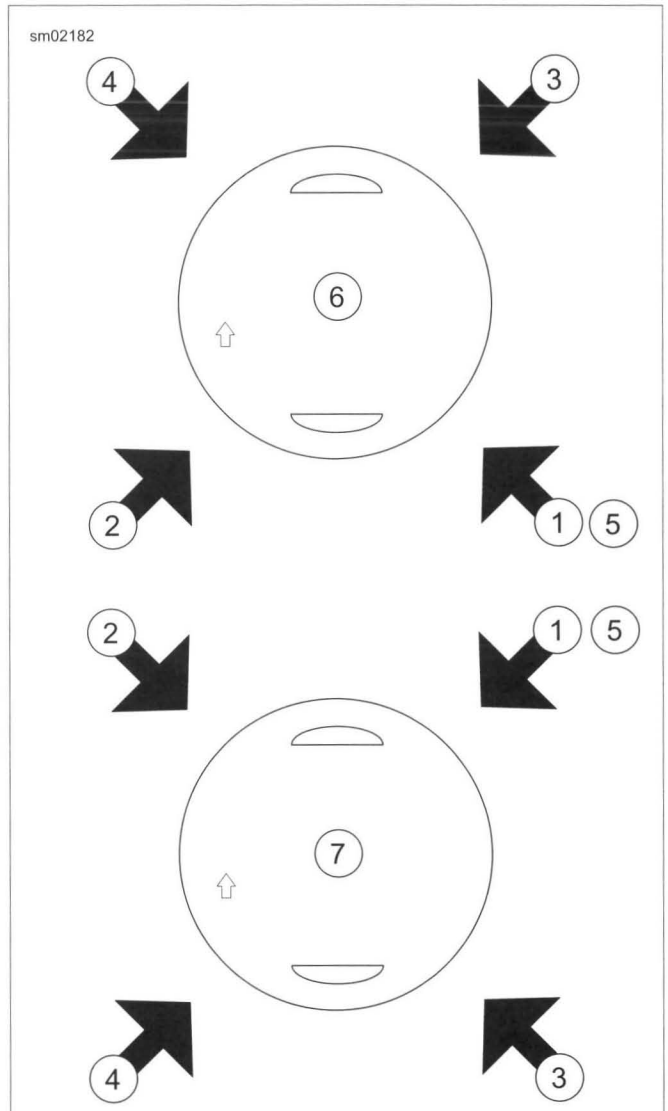


1. **Expander ring**
2. **Bottom oil rail**
3. **Top oil rail**
4. **Second compression ring**
5. **Top compression ring**
6. **Front**
7. **Rear**

**Figure 3-59. Piston Ring Order of Assembly and Gap Alignment**

## GENERAL

*NOTES*

- *Perform each step on one cylinder. Then repeat on the other cylinder.*
- *Make sure the piston is correct for the connecting rod style.*

This section provides a sequential process for top end assembly after a complete disassembly. If only a partial disassembly was performed, start where necessary and continue to the end of the section.

## PISTON

| PART NUMBER | TOOL NAME |
|---|---|
| HD-42317-A | PISTON PIN RETAINING RING INSTALLER |

1. Slide approximately 6.0 in (152 mm) of plastic tubing, rubber hose or conduit over each cylinder stud. Use material with ID of 0.5 in (12.7 mm).
2. See Figure 3-61Install one **new** piston pin retaining ring with the PISTON PIN RETAINING RING INSTALLER (Part No. HD-42317-A).
3. Apply SCREAMIN' EAGLE ASSEMBLY LUBE to piston pin, piston pin bores and upper connecting rod bore.
4. Remove water pipe insulation from connecting rod shank.
5. See Figure 3-60. Place piston over rod end with the arrow stamped on the top of the piston pointing toward the front of the engine.
6. See Figure 3-61. Insert piston pin (1) through pin bore and upper connecting rod bore. Push pin until it contacts retaining ring installed in opposite pin boss. Verify that end gap (3) for retaining ring is 180 degrees from opening (2).
7. Place clean shop towels over the cylinder and lifter bores to prevent the piston pin retaining ring from falling into the crankcase. Verify that the retaining ring groove is clean and free of dirt and grime.

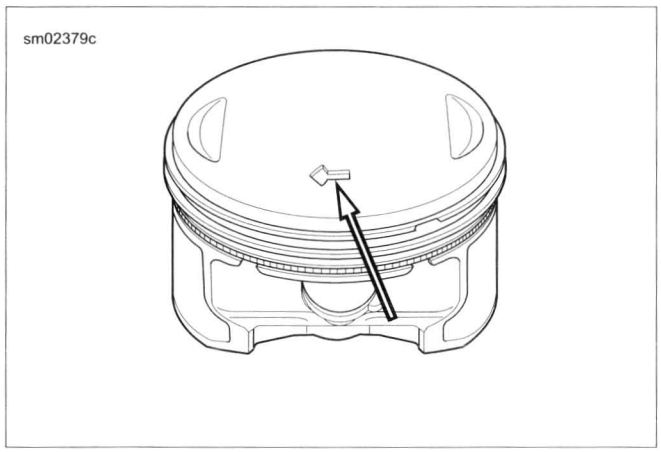


**Figure 3-60. Piston Installation Arrow**

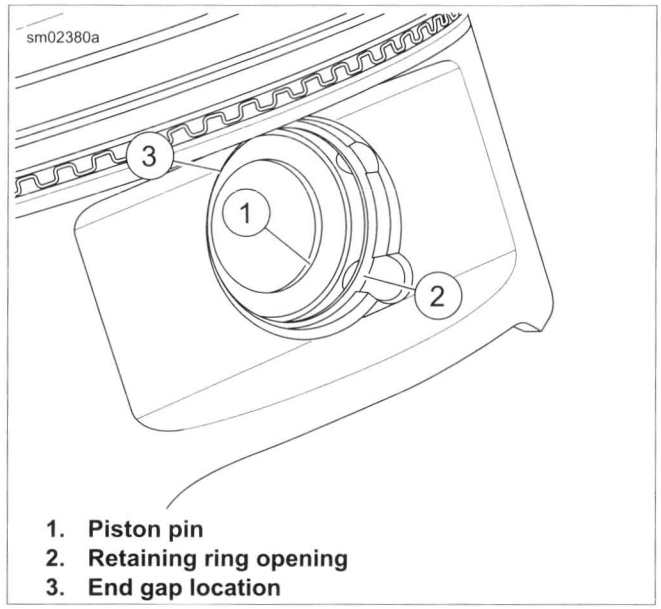


1. **Piston pin**
2. **Retaining ring opening**
3. **End gap location**

**Figure 3-61. Pre-Installed Retaining Ring**

*NOTE*

*Do not reuse piston pin retaining rings.*

8. Install **new** piston pin retaining ring with the PISTON PIN RETAINING RING INSTALLER (Part No. HD-42317-A).
   a. See Figure 3-62. Slide retaining ring down nose of tool until it contacts claw. Lightly squeeze handles of tool to capture retaining ring in claw.
   b. Release pressure on handles, rotate retaining ring so the end gap is centered at top of tool, then recapture in claw.
   c. Tilt the retaining ring forward until the end gap contacts nose of tool.
   d. See Figure 3-63. Insert the tool (1) into the piston pin bore until claw is aligned with slot (2) in piston.
   e. Firmly push the tool into the piston pin bore until it bottoms. Release handles and remove tool.
   f. Inspect the retaining ring to verify that it is fully seated in the groove.

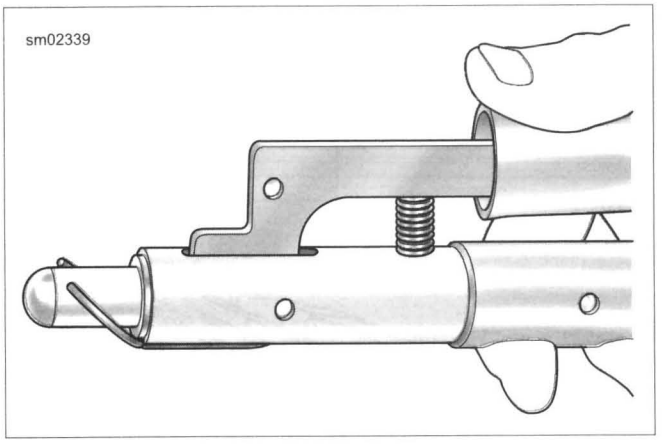


**Figure 3-62. Aligning Retaining Ring**

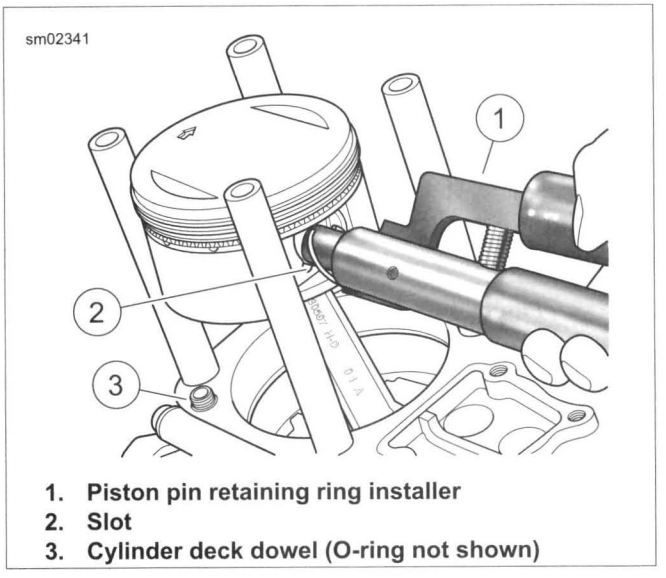


1. **Piston pin retaining ring installer**
2. **Slot**
3. **Cylinder deck dowel (O-ring not shown)**

**Figure 3-63. Pin Retaining Ring Installation**

## CYLINDER

| PART NUMBER | TOOL NAME |
|---|---|
| HD-42322-A | PISTON SUPPORT PLATE |
| HD-95952-1 | THREADED CYLINDERS |
| HD-95952-33C | CONNECTING ROD CLAMPING TOOL |
| HD-96333-51F | PISTON RING COMPRESSOR |

1. See Figure 3-63. Apply a very thin film of clean engine oil to **new** O-rings for both lower cylinder deck dowels. Install and verify that O-ring is properly seated in groove.
2. Apply a very thin film of clean engine oil to **new** O-ring seal for the bottom of the cylinder liner. Install **new** O-ring seal.

*NOTE*

*Excessive lubrication of cylinder sleeve O-ring seal will result in oil weepage between cylinder and crankcase as engine is run. This condition may be incorrectly diagnosed as an oil leak.*

3. See Figure 3-59. Verify that the piston ring end gaps are staggered. Rotate each ring to position the gap 90-180 degrees from the gap in the ring above it. Locate the top piston ring (5) gap towards the intake port.
4. Apply clean engine oil to piston, piston rings and cylinder bore.
5. Remove protective covers from cylinder studs. Rotate engine until piston is at top dead center. If necessary, see 3.16 TOP END OVERHAUL: DISASSEMBLY, Rocker Arm Support Plate for different methods of engine rotation.
6. See Figure 3-64. Install the PISTON SUPPORT PLATE (Part No. HD-42322-A).
   a. Slide both knobs (2) on support plate (1) away from forked end. Tighten knobs when contact is made with flats at end of slots.
   b. Point the forked end of the tool toward the center of the engine and the knobs facing downward. Capture shank of connecting rod in fork. Lay tool on cylinder deck so that knobs contact wall of cylinder bore.
   c. Rotate engine until piston skirt is centered and firmly seated on top of support plate.

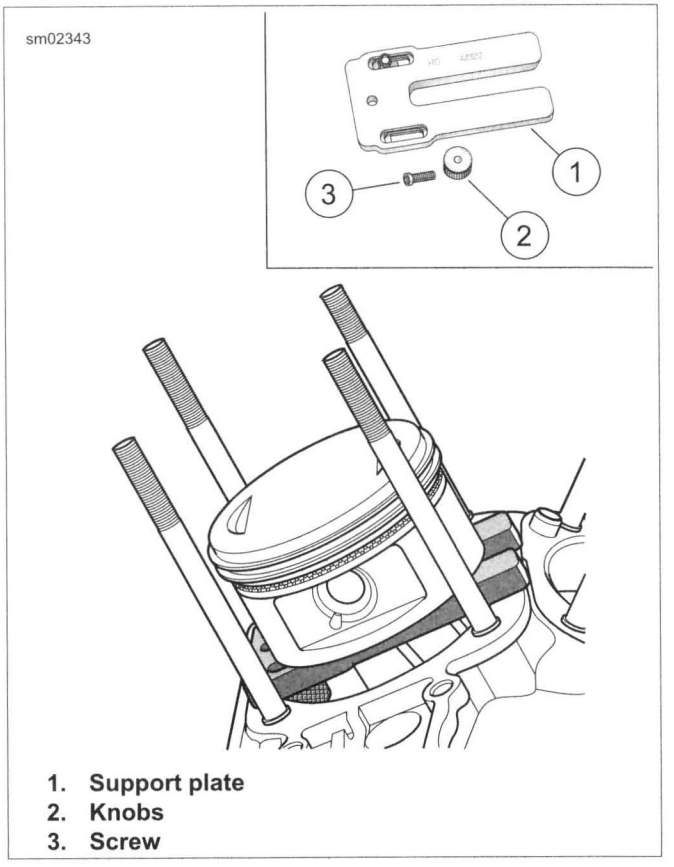


1. **Support plate**
2. **Knobs**
3. **Screw**

**Figure 3-64. Piston Support Plate**

7. See Figure 3-65. Install cylinder using PISTON RING COMPRESSOR (Part No. HD-96333-51F).
   a. Fit tabs on pliers (1) into slots of ring compressor band (2). The arrow stamped on the band indicates the side that faces up. The word "bottom" refers to the piston bottom.
   b. Place band around piston. Press the lever on the right side of the pliers to open the jaws for band expansion.
   c. Orient tool so that the top of the band is positioned between the top compression ring and the piston crown.
   d. Tightly squeeze handles of tool to compress piston rings. The ratcheting action of the tool allows release of the handles after the rings are compressed.
   e. With the indent in the cooling fins facing the right side of the engine, gently slide cylinder over the cylinder studs and the piston, resting it on the top of the ring compressor.
   f. Use the palms of both hands to push down on the cylinder with a sharp, quick motion to pass the piston ring area.
   g. Rotate the crankshaft slightly to raise piston off support plate. Remove pliers from connecting rod. Remove piston support plate.
8. Remove shop towels from around the crankcase bore.
9. Carefully set the cylinder over the two dowel pins in the cylinder deck. Push down on the cylinder until it is fully seated in the crankcase bore.
10. See Figure 3-66. Install THREADED CYLINDERS (Part No. HD-95952-1) from CONNECTING ROD CLAMPING TOOL (Part No. HD-95952-33C) onto cylinder studs with the knurled side down.

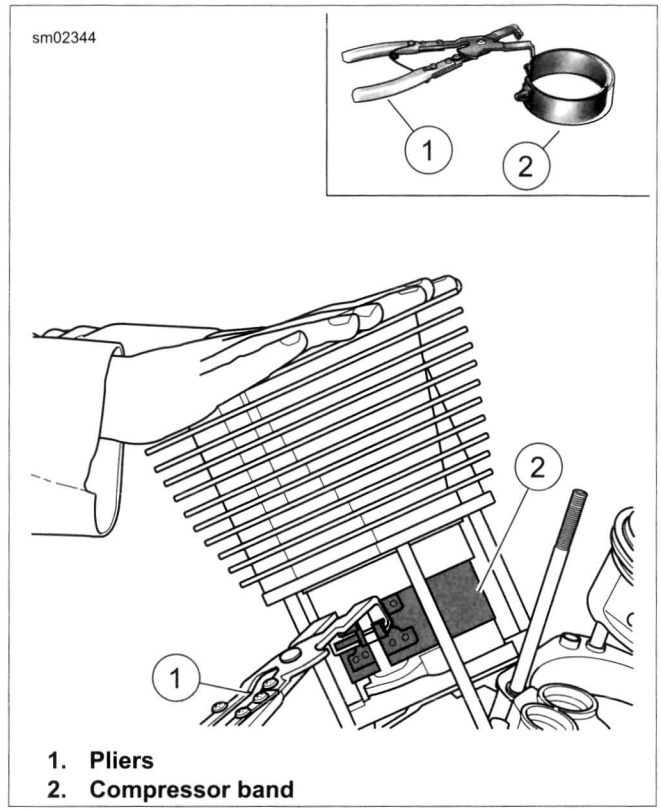


**1. Pliers**
**2. Compressor band**

**Figure 3-65. Piston Ring Compressor**

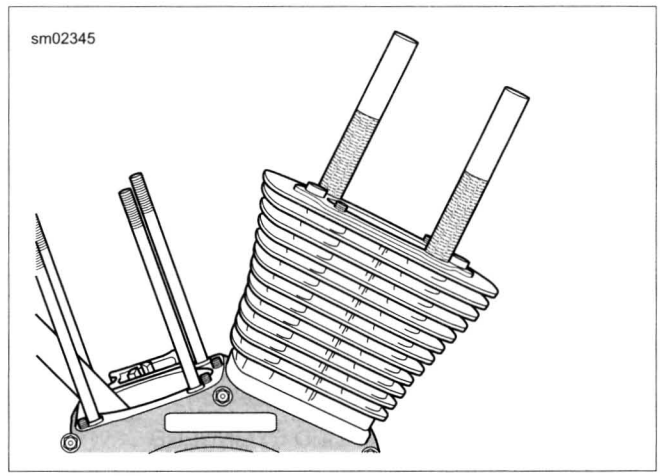


**Figure 3-66. Install Threaded Cylinders to Studs**

## CYLINDER HEAD

| PART NUMBER | TOOL NAME |
|---|---|
| HD-95952-1 | THREADED CYLINDERS |
| TA360 | SNAP-ON TORQUE ANGLE GAUGE |

| FASTENER | TORQUE VALUE | |
|---|---|---|
| Cylinder head bolts, first torque | 120-144 **in-lbs** | 13.6-16.3 Nm |
| Cylinder head bolts, second torque | 15-17 ft-lbs | 20.3-23.0 Nm |
| Cylinder head bolts, final torque | 90 degrees | 90 degrees |
| Rocker housing screws | 120-168 **in-lbs** | 13.6-19.0 Nm |

*NOTES*

- *"Front" or "Rear" is cast into the top of the cylinder head for proper installation. The indent in the cooling fins always faces the right side of the engine.*
- *Lower the cylinder head at an angle that closely approximates the angle of the cylinder to avoid damage.*
- *Thoroughly clean and lubricate the threads of the cylinder head bolts before installation. Friction caused by dirt and grime results in a false torque indication.*

1. Remove the THREADED CYLINDERS (Part No. HD-95952-1).
2. See Figure 3-67. With the part number facing up, place the head gasket over the two dowel pins in the upper flange of the cylinder.
3. Slide cylinder head squarely over the two cylinder flange dowel pins (2).
4. Lightly coat the threads and bottom face of the cylinder head bolts with clean engine oil. Wipe off excess oil.
5. See Figure 3-68. Loosely install the cylinder head bolts. Install two short bolts on the left side of the engine and two long bolts on the right.

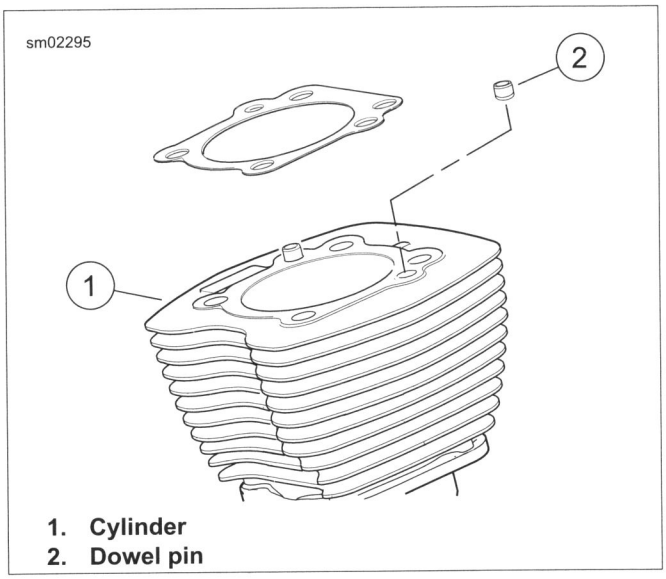


**1. Cylinder**
**2. Dowel pin**

**Figure 3-67. Cylinder Dowel Pins**

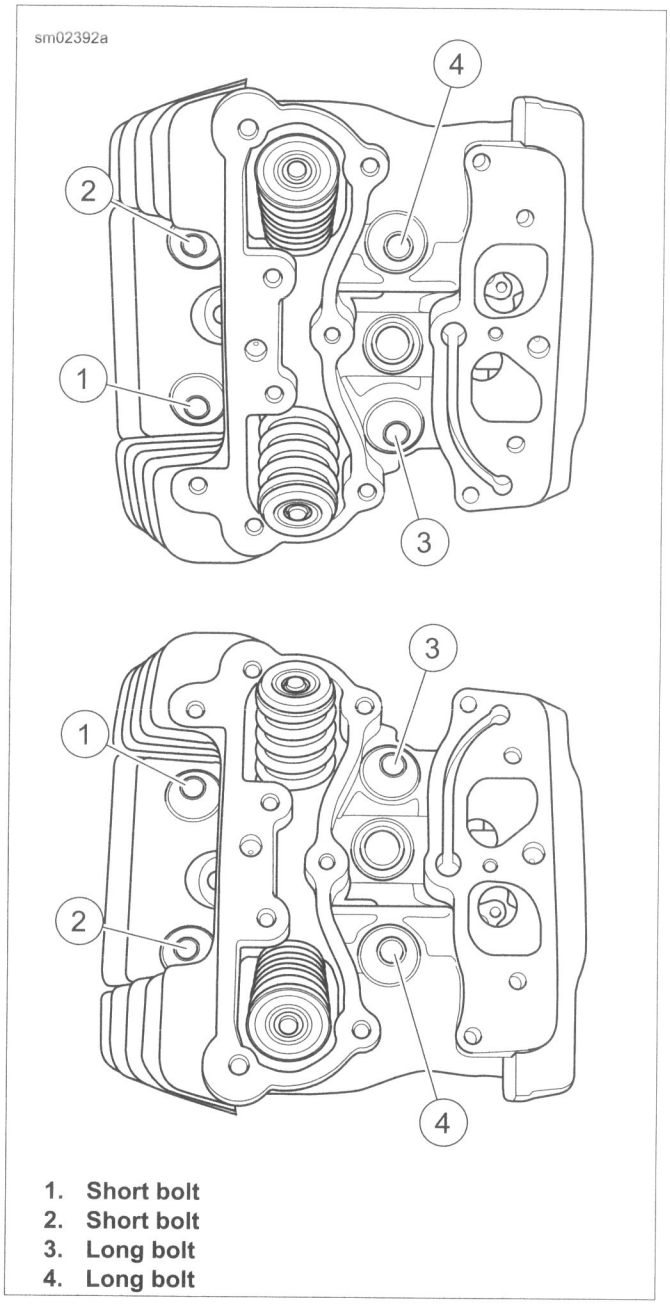


1. **Short bolt**
2. **Short bolt**
3. **Long bolt**
4. **Long bolt**

**Figure 3-68. Cylinder Head Bolt Torque Sequence (Top: Front Cylinder Head, Bottom: Rear Cylinder Head)**

*NOTE*

*Improperly tightened cylinder head bolts may result in gasket leaks, stud failure or distortion of the cylinder and/or cylinder head.*

6. Tighten the cylinder head bolts:
   a. See Figure 3-68. Tighten cylinder head bolts finger-tight in sequence shown.
   b. Following the same sequence, tighten the cylinder head bolts to 120-144 **in-lbs** (13.6-16.3 Nm).
   c. Continuing the same sequence, tighten each bolt to 15-17 ft-lbs (20.3-23.0 Nm).
7. See Figure 3-69. Final-tighten each bolt an additional 90 degrees (90 degrees) in the same sequence. For best results use SNAP-ON TORQUE ANGLE GAUGE (Part No. TA360).
   a. If using a grease pencil, mark a straight line on the cylinder head bolt continuing the line over onto the cylinder head.
   b. Use the marks as a guide to achieve the 90 degrees.

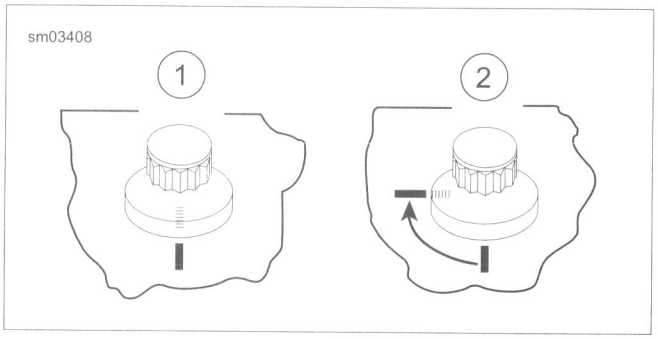


**Figure 3-69. Final Tightening for Cylinder Head Bolts**

8. **103 and larger engines:** Install the ACR. See 7.16 AUTOMATIC COMPRESSION RELEASE (ACR).

*NOTES*

- *The rocker housing gasket can be installed upside down resulting in an open breather channel. This causes a major oil leak when the vehicle is started, possibly resulting in engine and/or property damage.*
- *On front cylinder head, install side of gasket marked "front" facing up. On rear cylinder head, install side of gasket marked "rear" facing up.*

9. See Figure 3-70. Install a **new** rocker housing gasket on the cylinder head. Verify that the rocker housing gasket covers the breather channel.

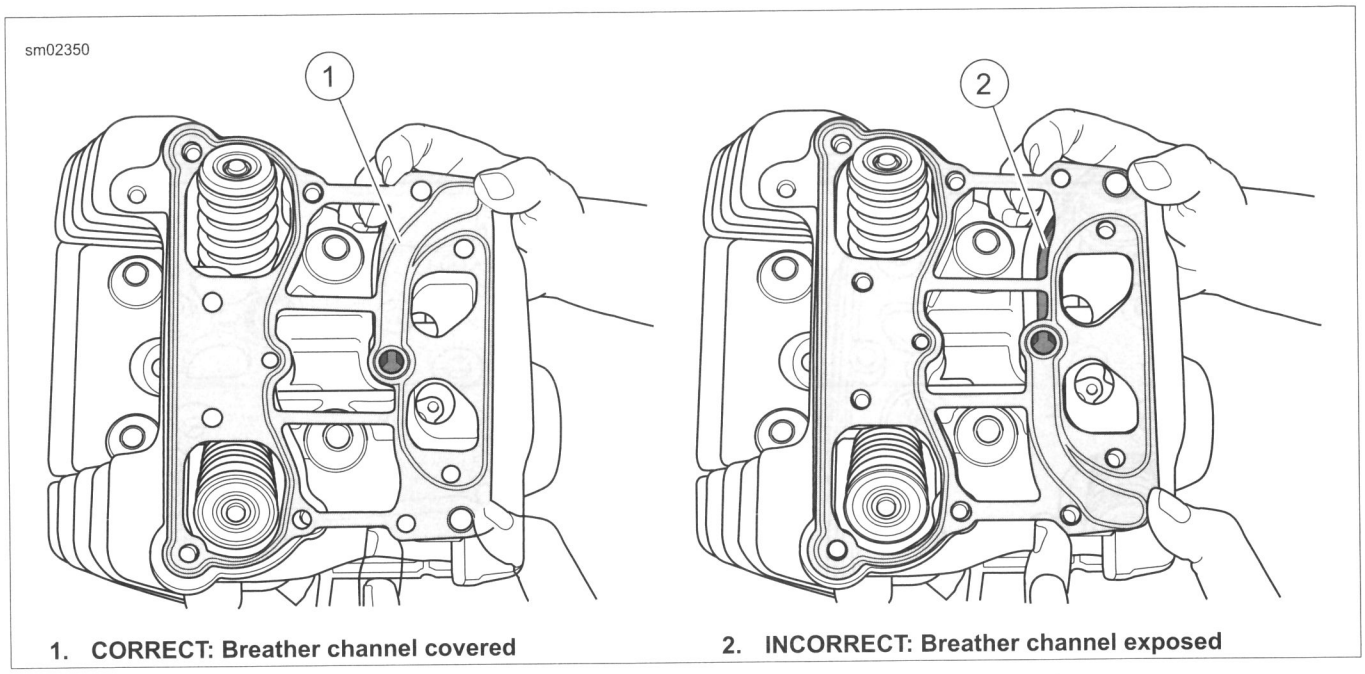


1. **CORRECT: Breather channel covered**
2. **INCORRECT: Breather channel exposed**

**Figure 3-70. Install Rocker Housing Gasket (Rear Cylinder Shown)**

10. See Figure 3-72. Install rocker housing.
    a. With the indent (1) facing forward, place the rocker housing into position.
    b. See Figure 3-71. Apply a drop of LOCTITE 243 MEDIUM STRENGTH THREADLOCKER AND SEALANT (blue) to the rocker housing screws.
    c. Install two long screws (2, 3) on the left side of the engine and four intermediate screws in the interior.
    d. Tighten in the sequence shown to 120-168 **in-lbs** (13.6-19.0 Nm).

*NOTE*

*Since many O-rings are similar in size and appearance, always use **new** O-rings, keeping them packaged until use to avoid confusion. **Use of the wrong O-ring will result in either oil leakage or low oil pressure.***

11. See Figure 3-72. Apply a very thin film of clean engine oil to **new** breather baffle hole O-ring (2). Install **new** O-ring in groove around breather baffle hole in rocker housing.

*NOTE*

*Do not confuse breather baffle hole O-ring (large inner diameter) with the top pushrod O-ring (small inner diameter).*

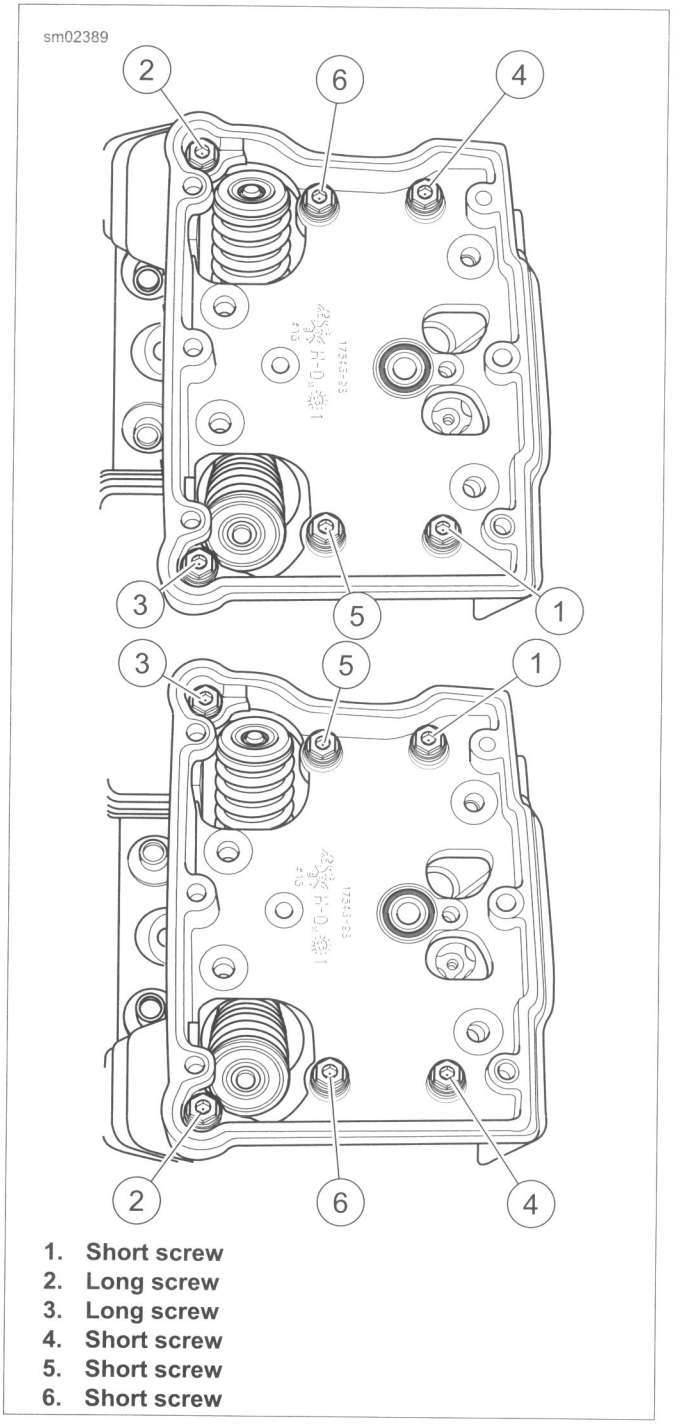


1. **Short screw**
2. **Long screw**
3. **Long screw**
4. **Short screw**
5. **Short screw**
6. **Short screw**

**Figure 3-71. Rocker Housing Torque Sequence**

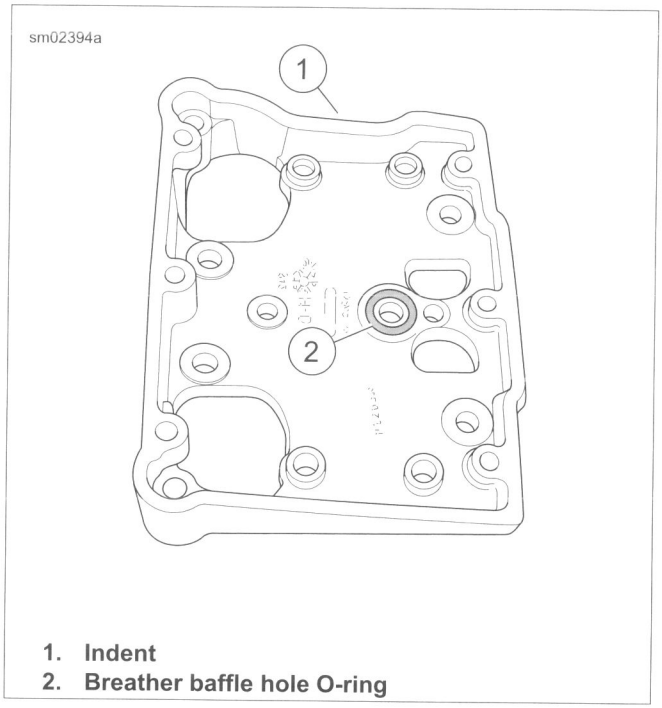


1. **Indent**
2. **Breather baffle hole O-ring**

**Figure 3-72. Rocker Housing Alignment**

## PUSHRODS, LIFTERS AND COVERS

| FASTENER | TORQUE VALUE | |
|---|---|---|
| Lifter cover screws | 100-120 **in-lbs** | 11.3-13.6 Nm |

1. Apply a thin film of SCREAMIN' EAGLE ASSEMBLY LUBE to outer surface of each lifter. Pour a small amount onto each cam lobe.
2. Carefully install lifters in the crankcase bores with the lifter oil hole aligned with the oil passage in the crankcase. Do not drop lifters onto cam lobes.
3. See Figure 3-73. Install the anti-rotation pin (4).

*NOTE*

*During cover installation, verify that the anti-rotation pin (4) is held in place by the ribs (3) cast into the inboard side of the lifter cover. Movement or loss of the pin can result in lifter rotation causing engine damage.*

4. Install the lifter cover (1) and **new** gasket (2) with four screws. Tighten to 100-120 **in-lbs** (11.3-13.6 Nm) in a cross-wise pattern.
5. Install **new** O-rings in the lifter cover bores and the cylinder head pushrod cover bores.
6. Install pushrod covers.
   a. Assemble pushrod covers with **new** O-rings.
   b. Hand compress the pushrod cover assembly and fit the pushrod cover into the lifter cover bore.
   c. Extending the assembly, fit the pushrod cover into the cylinder head bore.
   d. Do not install the spring cap retainers now.

*NOTE*

*To install spring cap retainers, see 3.23 TOP END OVERHAUL: ASSEMBLY, Rocker Arm Support Plate.*

7. Apply a small amount of SCREAMIN' EAGLE ASSEMBLY LUBE to the ends of each pushrod.
8. See Figure 3-74. Install the pushrods. If installing original parts, install them in their original locations and orientation.

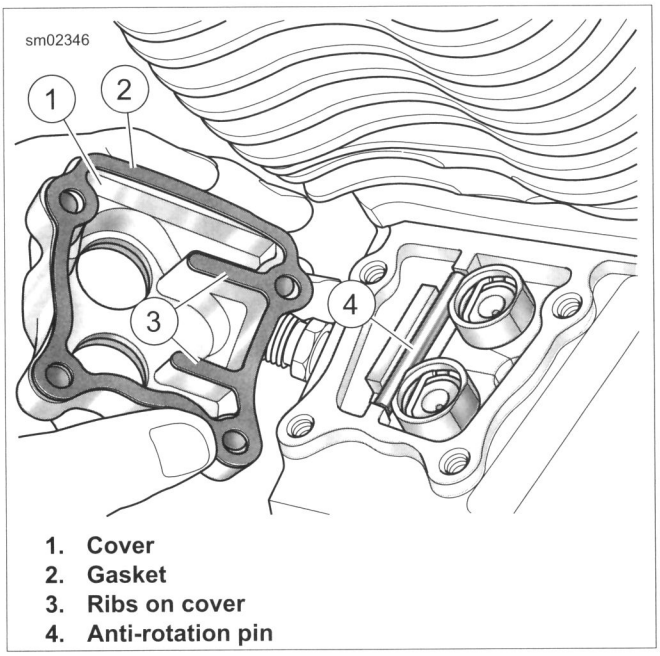


1. **Cover**
2. **Gasket**
3. **Ribs on cover**
4. **Anti-rotation pin**

**Figure 3-73. Installing Lifters**

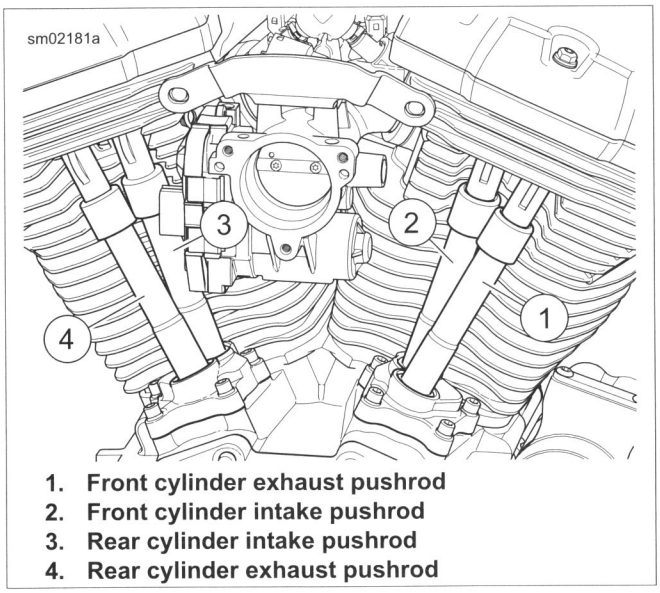


1. **Front cylinder exhaust pushrod**
2. **Front cylinder intake pushrod**
3. **Rear cylinder intake pushrod**
4. **Rear cylinder exhaust pushrod**

**Figure 3-74. Pushrod Locations**

## ROCKER ARM SUPPORT PLATE

| PART NUMBER | TOOL NAME |
|---|---|
| FRDH161 | SNAP-ON "DOG BONE" TORQUE ADAPTER |

| FASTENER | TORQUE VALUE | |
|---|---|---|
| Rocker arm support plate screws | 18-22 ft-lbs | 24.4-29.8 Nm |

*NOTE*

*Installing the rocker arms and rotating the crankshaft with the valve train loaded can damage valve train components.*

1. Rotate the crankshaft so both lifters of the cylinder being serviced are on the base circle (or lowest position) of the cam lobe.
2. See Figure 3-75. Place the rocker arm support plate assembly into the rocker housing. Loosely install four screws.

*NOTE*

***Engine in chassis:** Final tighten rocker arm support plate bolt on rear left side of rear cylinder using 3/8 in drive torque wrench with 1/2 in flank drive SNAP-ON "DOG BONE" TORQUE ADAPTER (Part No. FRDH161) or equivalent.*

3. Tighten rocker arm support plate bolts.
   a. Following the sequence shown, alternately tighten each of the four rocker arm support plate bolts one-quarter turn at a time until snug.
   b. Following the same sequence, tighten the bolts to 18-22 ft-lbs (24.4-29.8 Nm).
4. Verify that both pushrods spin freely.

*NOTE*

*Always service each cylinder separately. After the first cylinder is serviced, rotate the crankshaft to find the base circle on the second cam.*

5. Repeat steps on remaining cylinder.

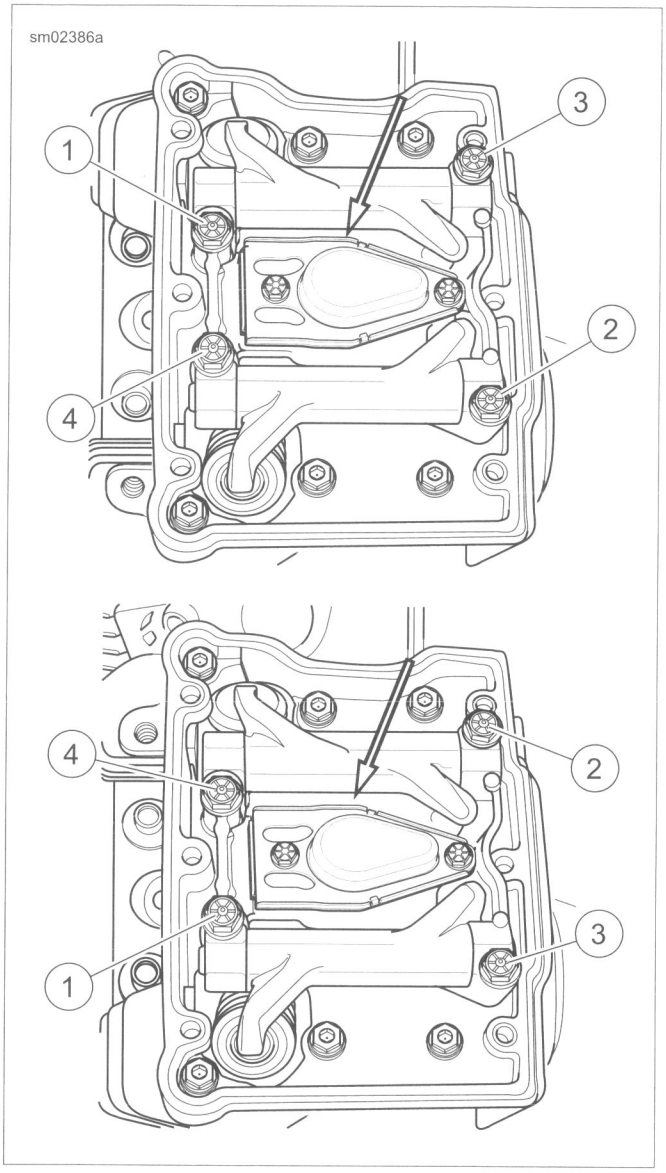


**Figure 3-75. Rocker Arm Support Tightening Sequence**

6. Complete installation of the pushrod covers.
   a. Verify that the O-ring ends of the upper and lower pushrod covers fit snugly into the cylinder head and lifter cover bores.
   b. Insert the upper edge of spring cap retainer into the cylinder head bore leaving the bottom edge free.
   c. Insert blade of small screwdriver between bottom edge of spring cap retainer and top of spring cap.

   *NOTE*

   *For best results, verify that screwdriver, spring cap and spring cap retainer are free of grease and oil.*

   d. See Figure 3-76. Press spring cap down and slide bottom edge of retainer toward tip of screwdriver.
   e. Verify that spring cap retainer seats tightly against upper pushrod cover.

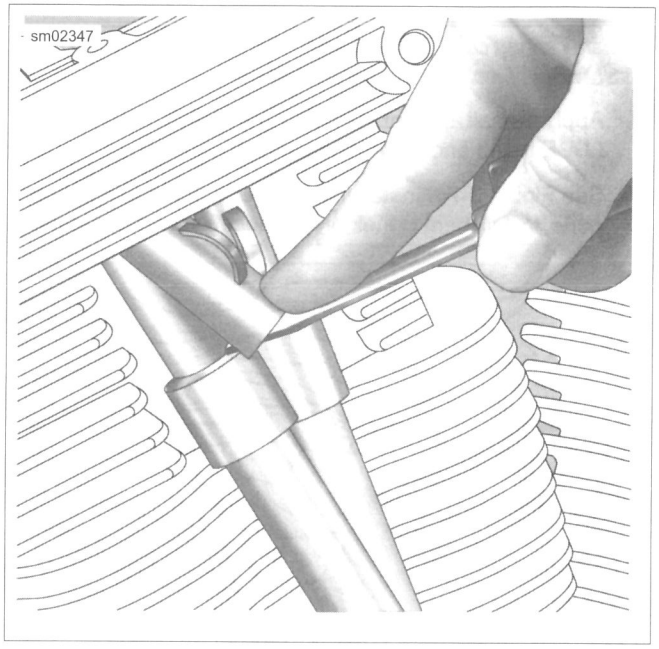


**Figure 3-76. Install Spring Cap Retainers**

## BREATHER AND ROCKER COVER

| PART NUMBER | TOOL NAME |
|---|---|
| SNAP-ON FRDH141 | "DOG BONE" TORQUE ADAPTER |

| FASTENER | TORQUE VALUE | |
|---|---|---|
| Breather assembly screws | 120-156 **in-lbs** | 13.6-17.6 Nm |
| Rocker cover screws | 15-18 ft-lbs | 20.3-24.4 Nm |

*NOTE*

*For breather assembly service procedures, see 3.17 BREATHER ASSEMBLY.*

1. To secure breather assembly, tighten two screws to 120-156 **in-lbs** (13.6-17.6 Nm).

*NOTE*

*If the engine is in the chassis, final tighten the three rocker cover screws on the left side of the rear cylinder using a 3/8 in drive torque wrench with a 7/16 in flank drive "DOG BONE" TORQUE ADAPTER (Part No. Snap-on FRDH141). Failure to properly use this combination will over-tighten the bolts causing distortion of the rocker cover.*

2. Apply a drop of LOCTITE 243 MEDIUM STRENGTH THREADLOCKER AND SEALANT (blue) to rocker cover screws.
3. See Figure 3-77. Install rocker cover and a **new** rocker cover gasket. Tighten in the sequence shown to 15-18 ft-lbs (20.3-24.4 Nm).
4. Complete motorcycle assembly.
   a. If engine was left in the chassis for service, see 3.13 ASSEMBLING MOTORCYCLE AFTER SERVICE.
   b. If engine was removed for service, see 3.15 INSTALLING ENGINE IN CHASSIS.

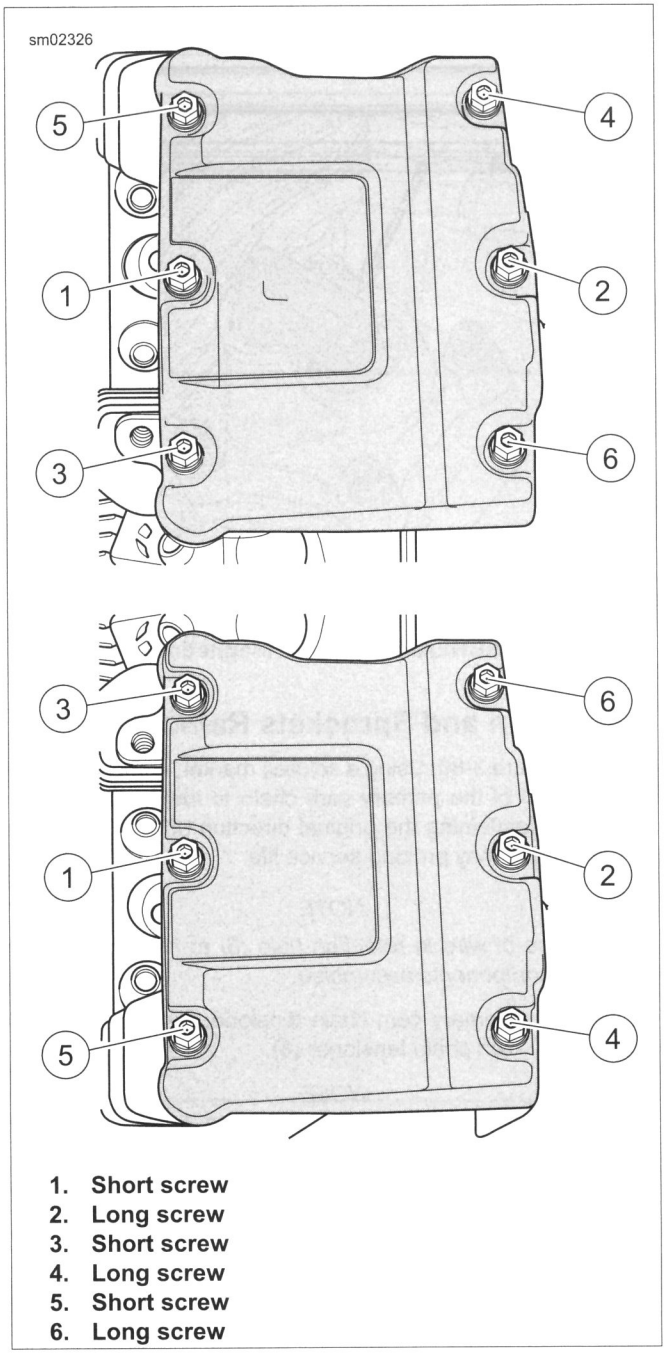


1. **Short screw**
2. **Long screw**
3. **Short screw**
4. **Long screw**
5. **Short screw**
6. **Long screw**

**Figure 3-77. Rocker Cover Bolts Torque Sequence**

## CAM SUPPORT PLATE AND COVER REMOVAL

| PART NUMBER | TOOL NAME |
|---|---|
| 93979-10 | SCREAMIN' EAGLE MAGNETIC LIFTER HOLDERS |
| HD-47941 | CRANKSHAFT/CAMSHAFT SPROCKET LOCKING TOOL |

### Prepare Engine

*NOTE*

*The following steps outline removal with the rest of the engine intact. If performing a complete engine overhaul, perform all steps under 3.16 TOP END OVERHAUL: DISASSEMBLY.*

1. Remove breather assembly, rocker arm support plate, pushrods and pushrod covers. Do not remove lifters. See appropriate topics under 3.16 TOP END OVERHAUL: DISASSEMBLY.
2. See Figure 3-79. Support lifters using SCREAMIN' EAGLE MAGNETIC LIFTER HOLDERS (Part No. 93979-10).

*NOTE*

*Label cam cover screws to aid during assembly.*

3. See Figure 3-78. Remove the screws to release the cam cover. Remove and discard the cam cover gasket.

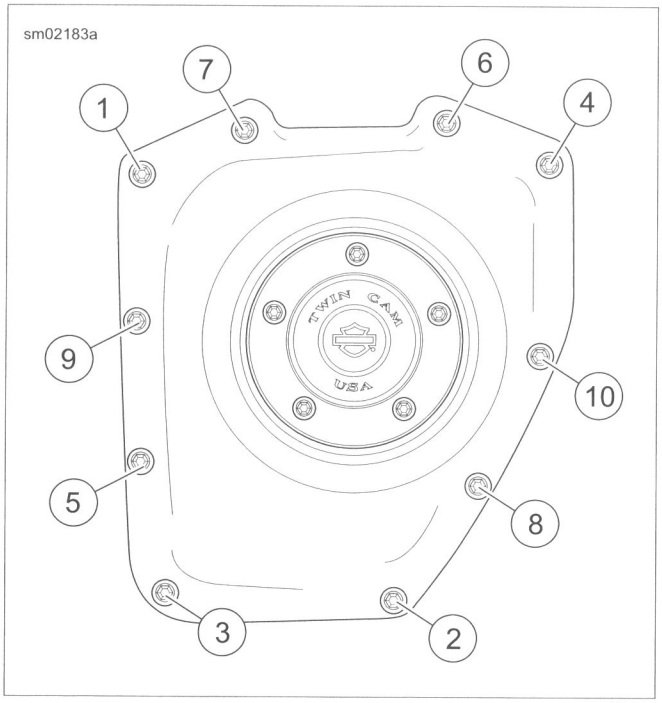


**Figure 3-78. Cam Cover Screws**

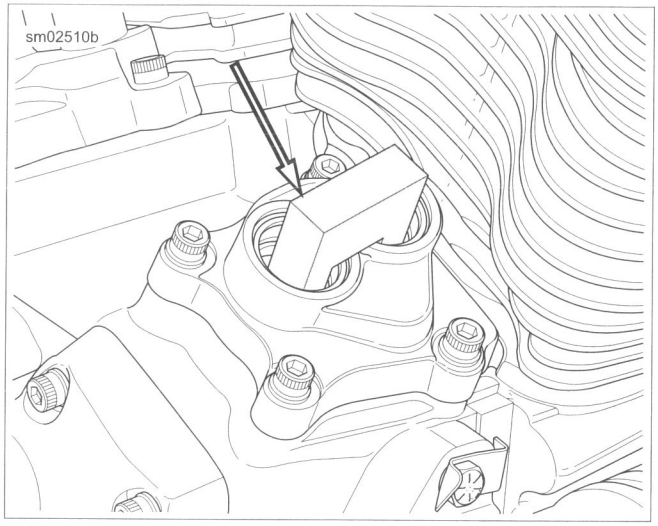


**Figure 3-79. SCREAMIN' EAGLE Magnetic Lifter Holder**

### Cam Chain and Sprockets Removal

1. See Figure 3-80. Using a colored marker, mark one of the links (1) of the primary cam chain to identify the visible side. Maintaining the original direction of rotation during assembly may prolong service life.

*NOTE*

*Use a piece of wire in retention hole (6) to keep cam chain tensioner components assembled.*

2. Remove primary cam chain tensioner fasteners (4) and primary cam chain tensioner (3).

*NOTE*

*Verify side of tool labeled "crank side" faces crankshaft sprocket.*

3. See Figure 3-81. Install CRANKSHAFT/CAMSHAFT SPROCKET LOCKING TOOL (Part No. HD-47941) between rear cam sprocket (2) and crank sprocket (5).

**⚠WARNING**

**Be sure to follow manufacturer's instructions when using propane torches. Failure to follow manufacturer's instructions can cause a fire, which could result in death or serious injury. (00465c)**

- **Avoid directing heat toward any fuel system component. Extreme heat can cause fuel ignition/explosion resulting in death or serious injury.**
- **Avoid directing heat toward any electrical system component.**

*NOTES*

- *Only use approved methods for removing rear cam bolt. Other methods of removal, such as the use of a large*

*breaker bar, may result in damage to chain drive and other components.*

- *If necessary, soften threadlocker by using heat from a small propane torch. Apply flame evenly around bolt in a circular motion, but do not allow bolt to turn blue.*

4. Remove the rear cam sprocket bolt and flat washer (1).
5. Remove the crank sprocket bolt and flat washer (4).
6. Remove camshaft locking tool.
7. Use a small pry bar between rear cam sprocket and cam support plate to carefully remove rear cam sprocket.
8. Use a small pry bar to ease off crank sprocket. Remove both sprockets and primary cam chain.

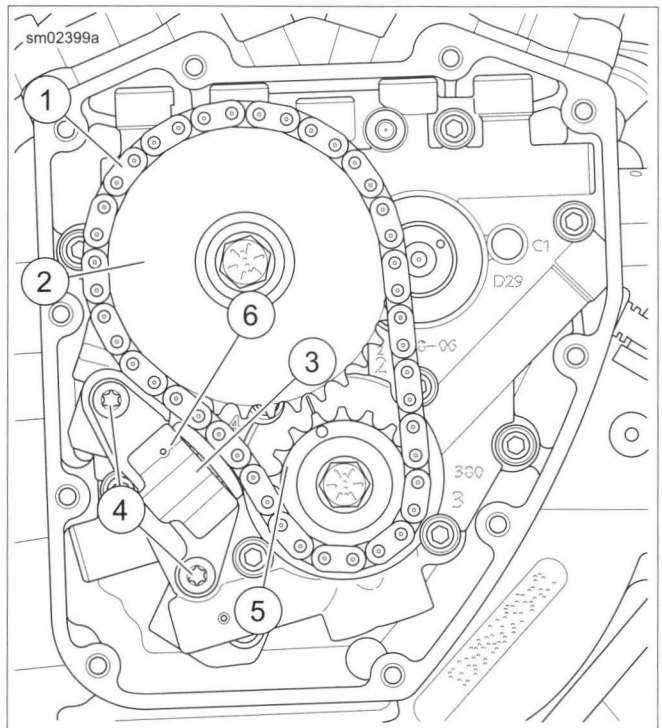


1. **Link**
2. **Rear cam sprocket**
3. **Primary cam chain tensioner**
4. **Primary cam chain tensioner fasteners**
5. **Crank sprocket**
6. **Retention hole**

**Figure 3-80. Cam Support Plate Assembly**

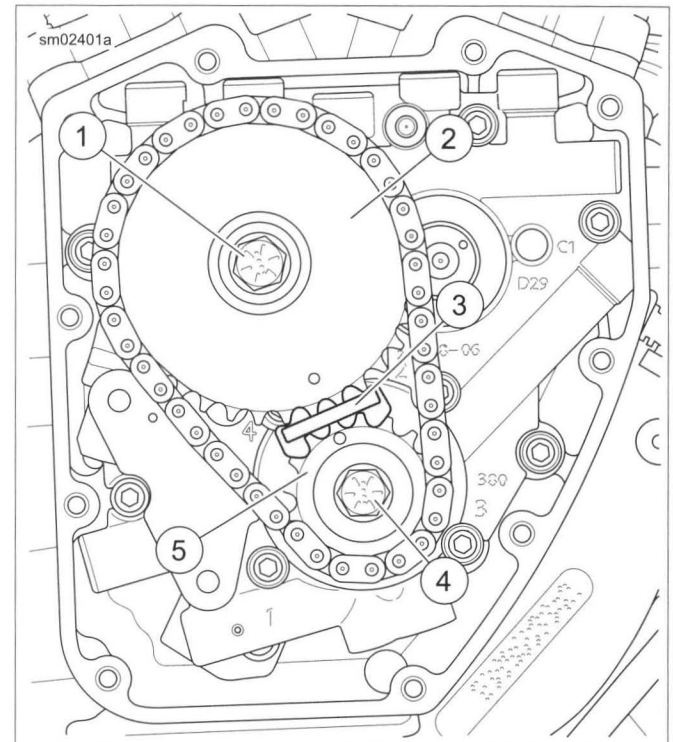


1. **Rear cam sprocket bolt (large) and flat washer**
2. **Rear cam sprocket**
3. **Camshaft locking tool**
4. **Crank sprocket bolt (small) and flat washer**
5. **Crank sprocket**

**Figure 3-81. Cam Support Plate Assembly**

## Cam Support Plate Removal

1. See Figure 3-82. Following the sequence shown, remove four screws.
2. See Figure 3-83. Following the sequence shown, remove six screws to release the cam support plate from the crankcase.
3. See Figure 3-84. Use a small pry bar between the cam support plate and crankcase flange in areas near the ring dowels (2, 3). Remove cam support plate and camshafts.

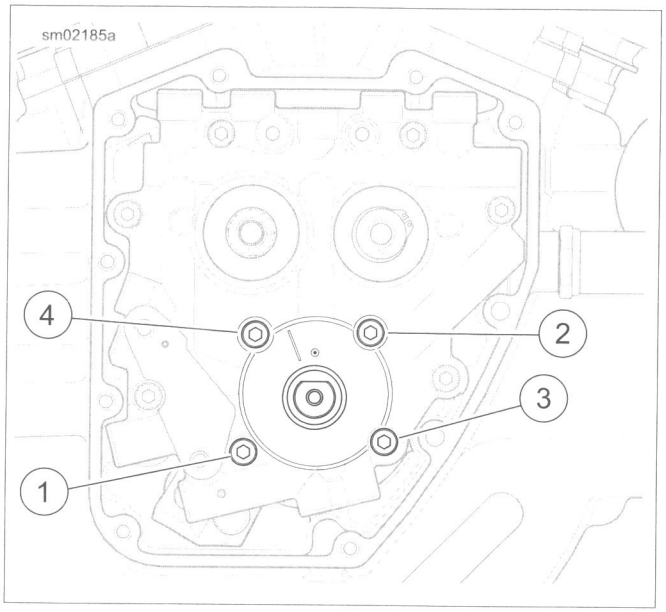


Figure 3-82. Oil Pump Torque Sequence

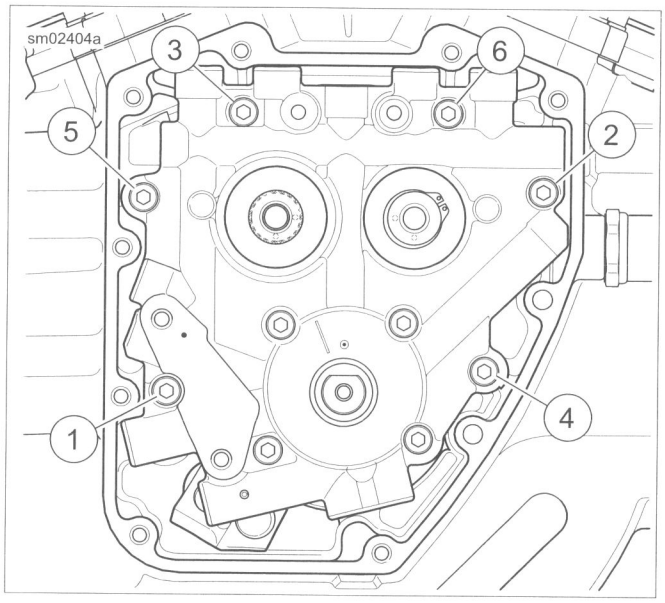


Figure 3-83. Cam Support Plate Torque Sequence

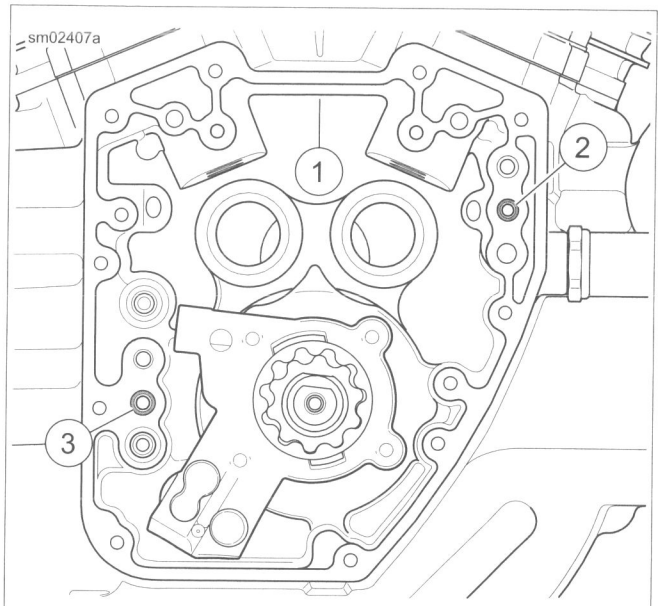


1. Right crankcase half
2. Forward ring dowel
3. Rear ring dowel

Figure 3-84. Ring Dowels

## CAM SUPPORT PLATE CLEANING AND INSPECTION

### Oil Pressure Relief Valve

Inspect oil pressure valve. See 3.24 CAM COMPARTMENT AND COMPONENTS, Oil Pressure Relief Valve.

### Cam Support Plate

1. Measure the diameters of the camshaft bores and crankshaft bore. See 3.3 SERVICE WEAR LIMITS, General.
2. Measure flatness of support plate. See 3.3 SERVICE WEAR LIMITS, General.
3. Inspect gerotor area for excessive wear or deep grooves.
4. Verify that all oil holes are clean and open.

*NOTE*

*The oiling system is carefully designed for optimum efficiency. All oil holes and passageways are specially sized. Avoid enlarging oil holes during cleaning. Any modification of the oiling system will adversely affect oil pressure or cooling and lubrication efficiency.*

## CAMSHAFTS

| PART NUMBER | TOOL NAME |
|---|---|
| HD-47956 | CAMSHAFT ASSEMBLY TOOL |

| FASTENER | TORQUE VALUE | |
|---|---|---|
| Secondary cam chain tensioner fastener | 90-120 **in-lbs** | 10.2-13.6 Nm |

### Removal

1. See Figure 3-85. Remove screws (4). Remove secondary cam chain tensioner (3).

**⚠WARNING**

**Wear safety glasses or goggles when removing or installing retaining rings. Retaining rings can slip from the pliers and could be propelled with enough force to cause serious eye injury. (00312a)**

2. Remove retaining ring securing front camshaft. Discard retaining ring.
3. Remove spacer from front camshaft. Do not mix front and rear camshaft spacers. Front spacer is 0.100 in (2.54 mm) thick.
4. Using a colored marker, mark one of the links of the secondary cam chain. Maintaining the original direction of rotation during assembly may prolong service life.
5. Slide camshafts and secondary cam chain out of cam support plate.
6. Remove secondary cam chain from cam sprockets.

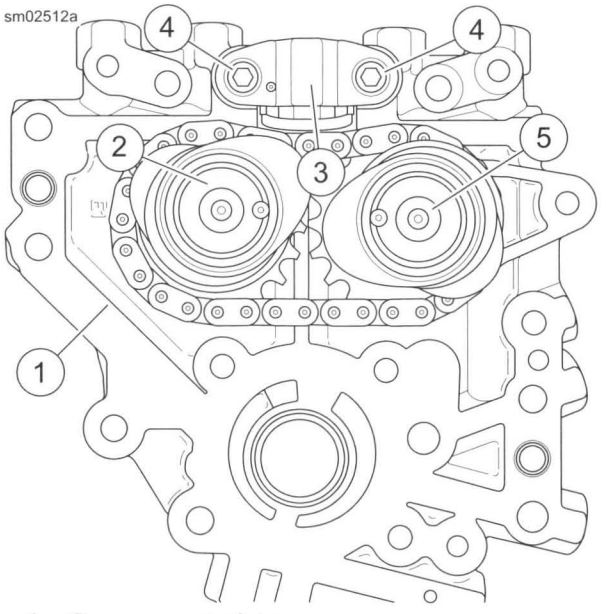


1. **Cam support plate**
2. **Front cam**
3. **Secondary cam chain tensioner**
4. **Secondary cam chain tensioner fasteners**
5. **Rear cam**

**Figure 3-85. Camshafts**

## Installation

1. See Figure 3-86. Align timing marks on teeth of cam sprockets.

*NOTE*

*Do not mix camshafts during installation. The rear camshaft, identified by the splined shaft, must go into the hole at the rear of the cam support plate.*

2. Place secondary cam chain around sprockets of both camshafts while keeping timing marks (6) in alignment. Verify mark placed on chain link during disassembly is visible.

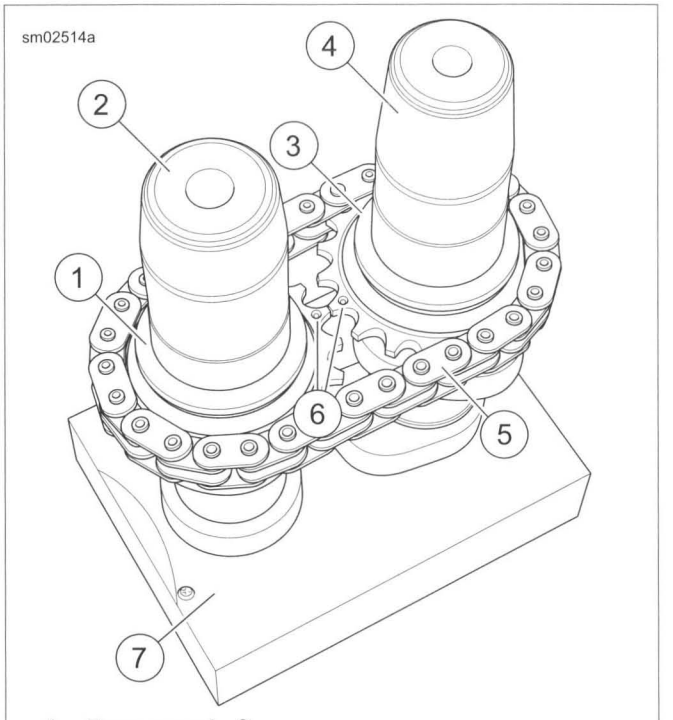


1. **Rear camshaft**
2. **Small guide**
3. **Front camshaft**
4. **Large guide**
5. **Cam chain**
6. **Timing marks**
7. **Assembly tool base**

**Figure 3-86. Camshaft Assembly Tool**

3. See Figure 3-86. Place crankcase side of camshaft/cam chain assembly into CAMSHAFT ASSEMBLY TOOL (Part No. HD-47956) base (7) while maintaining cam timing mark (6) alignment.
4. Place small guide (2) on rear camshaft (1). Place large guide (4) on front camshaft (3).
5. Lubricate support plate camshaft cavities with SCREAMIN' EAGLE ASSEMBLY LUBE.
6. Install cam support plate over guides.
7. Remove guides and base.
8. See Figure 3-88. Using a straightedge, verify that the timing marks are in alignment. If they are not, remove, align and recheck.
9. Install 0.100 in (2.54 mm) thick front camshaft spacer over end of front camshaft.

**⚠WARNING**

**Wear safety glasses or goggles when removing or installing retaining rings. Retaining rings can slip from the pliers and could be propelled with enough force to cause serious eye injury. (00312a)**

*NOTE*

*The front camshaft retaining ring is a wave style. Correct orientation of the retaining ring is important so the retaining ring ears do not contact the cam drive sprocket spacer.*

10. Install **new** retaining ring in groove at end of front camshaft.
    a. See Figure 3-87. Orient retaining ring so concave side (2) faces the cam drive sprocket spacer (5).
    b. When correctly installed, ears (1) of retaining ring are raised slightly.
    c. Attempt to insert a 0.0015 in (0.04 mm) flat feeler gauge (4) between ears (1) of retaining ring (3) and cam drive sprocket spacer (5). If feeler gauge cannot be inserted, remove and discard retaining ring. Install a new retaining ring. Again verify that the feeler gauge will pass between ears and spacer.

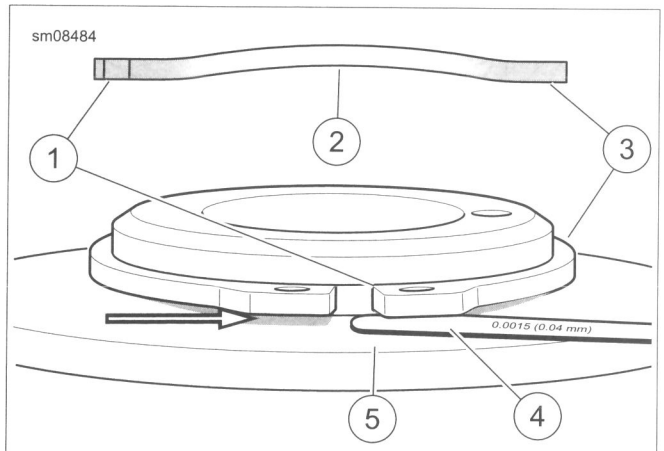


1. **Ear**
2. **Concave side**
3. **Retaining ring**
4. **0.0015 in (0.04 mm) feeler gauge**
5. **Surface of cam drive sprocket spacer**

**Figure 3-87. Camshaft Retaining Ring Orientation**

11. See Figure 3-89. Inspect primary and secondary cam chain tensioners.
    a. Inspect tensioners for wear. Replace tensioners if damaged or if chain contact portion of shoe material is less than 0.060 in (1.52 mm) thick.
    b. Make sure primary and secondary cam chain tensioners are assembled as shown. If assembled incorrectly, tensioners will not function properly.
12. Install secondary cam chain tensioner and fasteners. Tighten to 90-120 **in-lbs** (10.2-13.6 Nm).

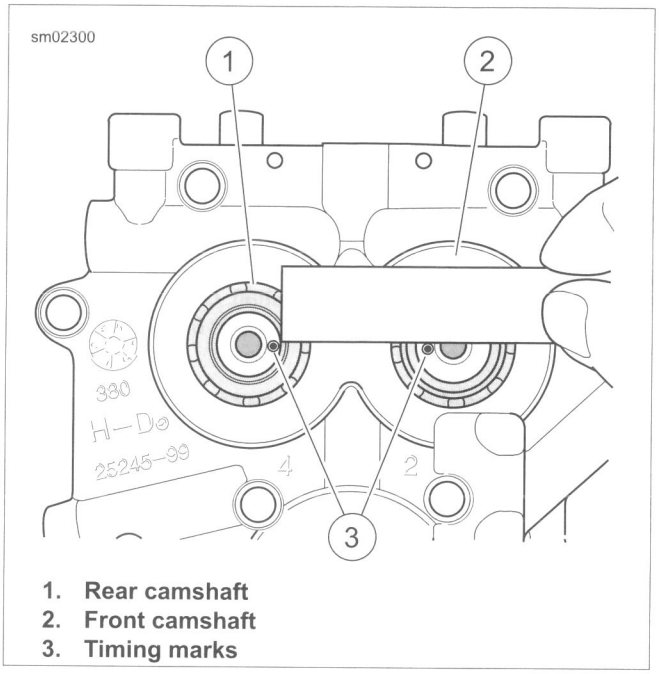


1. **Rear camshaft**
2. **Front camshaft**
3. **Timing marks**

**Figure 3-88. Verify Alignment of Timing Marks**

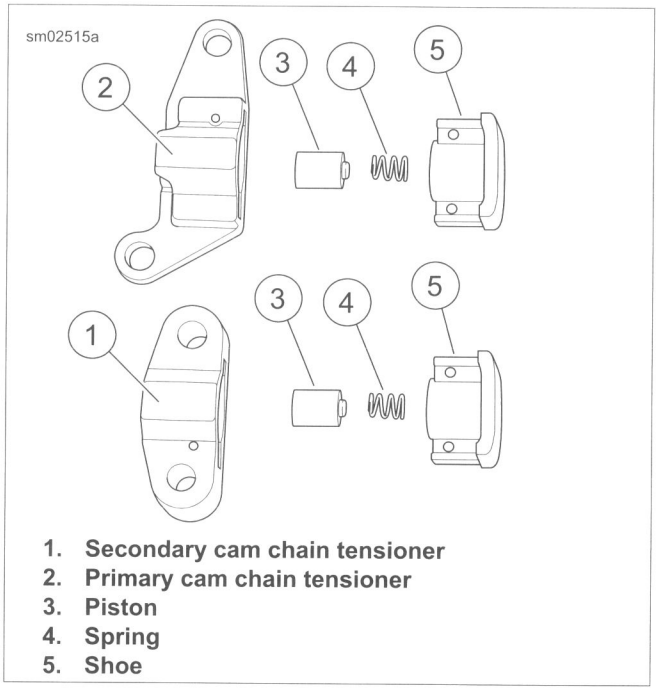


1. **Secondary cam chain tensioner**
2. **Primary cam chain tensioner**
3. **Piston**
4. **Spring**
5. **Shoe**

**Figure 3-89. Cam Chain Tensioner Assemblies**

## OIL PRESSURE RELIEF VALVE

### Removal

1. See Figure 3-90. Secure the cam support plate in a vise with soft jaws.

2. Measure depth of piston in cam support plate:
   a. With piston in place, insert straight stiff wire into bore until it bottoms in the piston.
   b. Mark wire at edge of bore in cam support plate.
   c. Remove wire. Measure distance from the end to the mark. Depth should be approximately 2.25 in (57.15 mm).
   d. If it is less than specified, the piston is not fully seated and a low oil pressure condition likely the result.
3. Use a 1/8 in punch to remove roll pin (1). Discard roll pin.
4. Remove spring (2) and piston (3) from bypass port.

## Inspection

*NOTE*

*A stretched spring or sticking piston can result in high oil pressure.*

1. Inspect spring for stretching, kinks and distortion.
2. Inspect piston and bore for burrs, scoring or other damage. Look for steel particles or aluminum chips. Replace cam support plate and piston if any of these conditions are found.
3. Measure running clearance of piston in bore. If running clearance exceeds 0.003 in (0.076 mm), install **new** piston and measure again. Replace cam support plate if running clearance still exceeds specification.

## Installation

1. Secure the cam support plate in a vise with soft jaws.
2. See Figure 3-90. Lubricate piston (3) with SCREAMIN' EAGLE ASSEMBLY LUBE. Slide piston into bypass port of cam support plate with the open side facing outward.
3. Slide spring (2) into bypass port until seated in piston.
4. Start **new** roll pin (1) into hole in cam support plate. Compress spring using the blade of a small screwdriver.
5. Hold spring compressed and tap roll pin into cam support plate until it approaches pin hole on opposite side.
6. Remove screwdriver to release spring. Verify that spring is straight and square in bore.
7. Use a 1/8 in punch to install roll pin until flush with casting.

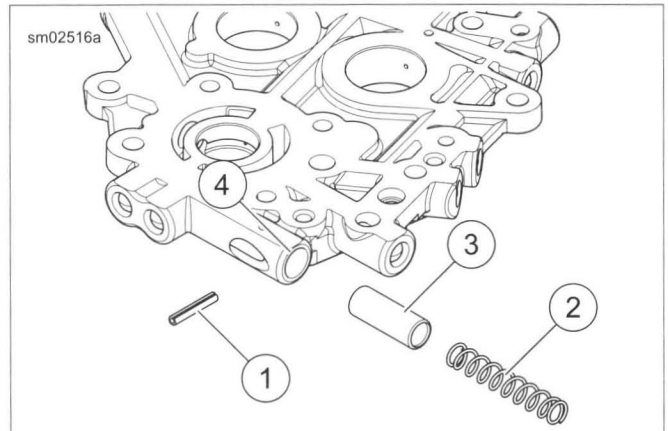


1. **Roll pin**
2. **Spring**
3. **Piston**
4. **Bypass port**

**Figure 3-90. Oil Pressure Relief Valve Assembly**

# CAM NEEDLE BEARINGS

| PART NUMBER | TOOL NAME |
|---|---|
| HD-42325-A | CAMSHAFT NEEDLE BEARING REMOVER/INSTALLER |

## Removal

1. Obtain the CAMSHAFT NEEDLE BEARING REMOVER/INSTALLER (Part No. HD-42325-A).
2. See Figure 3-92. Remove four thumbscrews (1) from threaded holes in support plate (2), if installed.
3. Sparingly apply clean engine oil (9) to threads of collet (3).
4. Slide collet through support plate so that threaded end exits stamped side of plate.
5. Aligning two large holes in support plate with needle bearing bores, hang right side of plate on ring dowel in crankcase flange.
6. Install thumbscrews to secure support plate to crankcase.
7. Center expandable end of collet in bearing bore and slide bearing (7) and flat washer (5) on threaded end. Start hex nut (8) on threaded end.
8. Push expandable end of collet through bearing bore into flywheel compartment. Feel for inside edge of needle bearing using end of collet and then back off slightly.

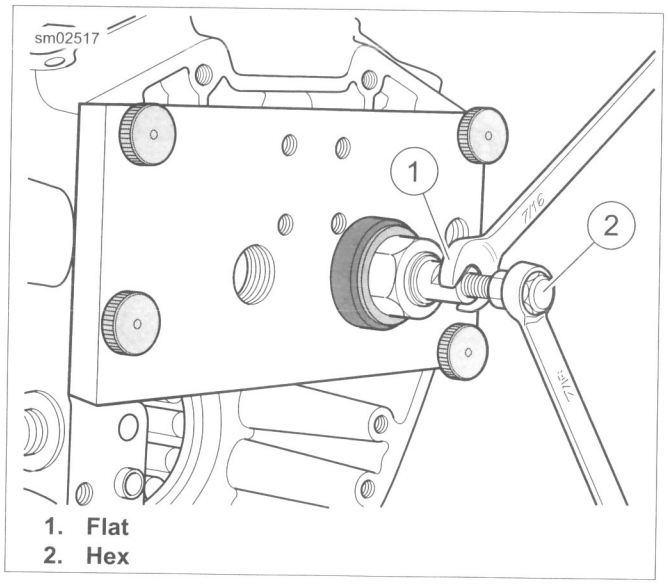


1. Flat
2. Hex

**Figure 3-91. Expanding Collet by Turning Hex Clockwise**

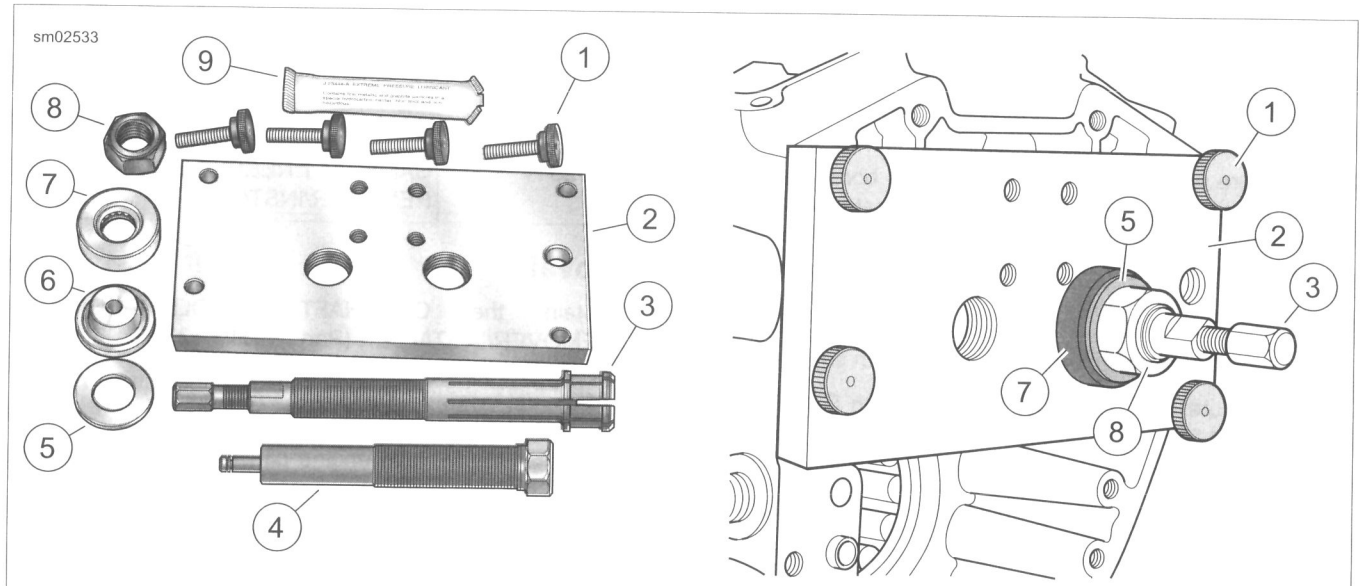


1. Thumbscrew
2. Support plate
3. Removal collet (Threaded end: left, Expandable end: right)
4. Installer forcing screw
5. Flat washer
6. Installer (1.0 in, 25.4 mm)
7. Bearing
8. Hex nut
9. Graphite lubricant

**Figure 3-92. Camshaft Needle Bearing Remover/Installer**

9. Holding collet to prevent lateral movement, finger-tighten hex nut until bearing contacts support plate.
10. See Figure 3-91. Hold the flat on the collet and expand collet by turning hex at end of shaft clockwise.
11. See Figure 3-93. Turn hex nut clockwise until bearing is free.
12. Remove four thumbscrews. Pull support plate from crankcase.
13. Turn hex at end of shaft counterclockwise to close collet. Remove and discard needle bearing.
14. Repeat procedure to remove second needle bearing.

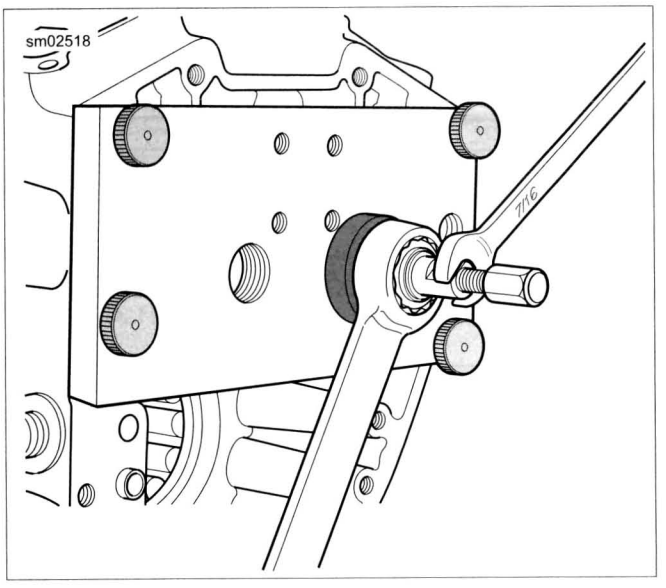


**Figure 3-93. Bearing Removal**

## Installation

1. Obtain the CAMSHAFT NEEDLE BEARING REMOVER/INSTALLER (Part No. HD-42325-A).

*NOTE*

*To avoid engine damage, install needle bearings to the correct depth.*

2. See Figure 3-94. Using a dial caliper, measure thickness of support plate.
3. Determine the required distance from the top of the support plate to the edge of the installed needle bearing by adding support plate thickness to 3.10 in (78.7 mm). Record this value.

*NOTE*

*For example, if the support plate is 0.50 in (12.7 mm) thick, then the measurement from the top of the support plate to the face of the needle bearing should be 3.60 in (91.4 mm).*

4. See Figure 3-92. Sparingly apply clean engine oil to threads of installer forcing screw (4).
5. Thread installer forcing screw into stamped side of support plate (2) until threads begin to emerge from opposite side.
6. Place installer (6) at end of installer forcing screw.
7. Place **new** needle bearing on installer with letters facing cam compartment.
8. See Figure 3-95. Aligning two large holes in support plate with needle bearing bores, hang right side of plate on ring dowel in crankcase flange.
9. Install thumbscrews to secure support plate to crankcase.

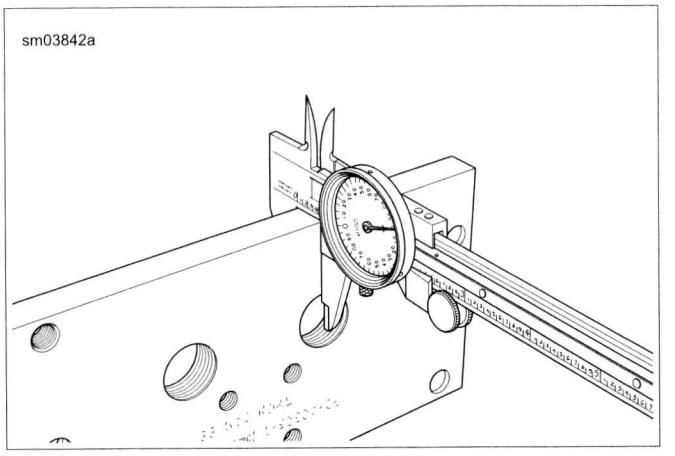


**Figure 3-94. Measure Thickness of Support Plate**

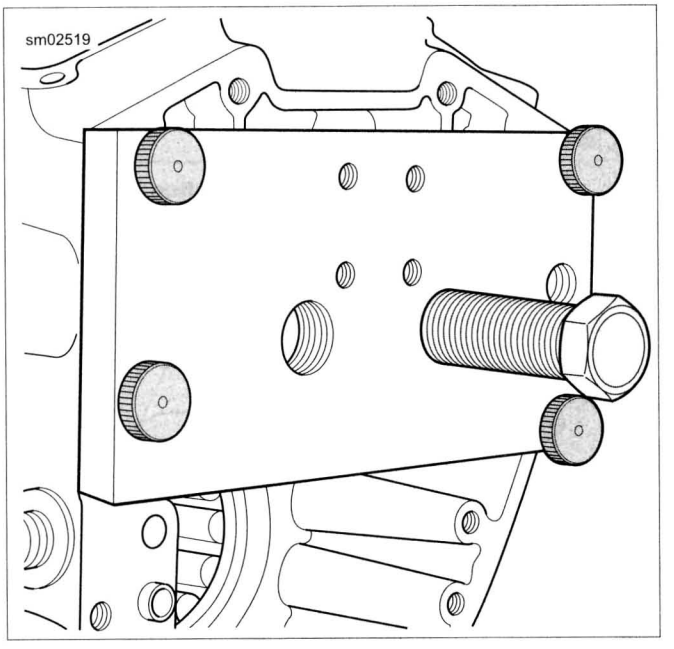


**Figure 3-95. Installer Forcing Screw Installation**

10. Install first needle bearing:
    a. See Figure 3-96. Turn forcing screw clockwise to press needle bearing into bore.
    b. Back out forcing screw. Remove installer. Remove forcing screw from support plate.
    c. See Figure 3-97. Insert dial caliper through forcing screw bore and measure distance from top of support plate to edge of needle bearing.
    d. Repeat steps until bearing is at correct installed depth. Temporarily leave tool in this position.
11. See Figure 3-98. Once the bearing is at correct depth, measure from head (top) of installer forcing screw to support plate. Record this measurement.

12. Repeat installation with second **new** needle bearing.
    a. Remove forcing screw from support plate. Install over second needle bearing bore.
    b. Turn forcing screw until distance from head (top) of forcing screw to support plate equals measurement recorded previously.

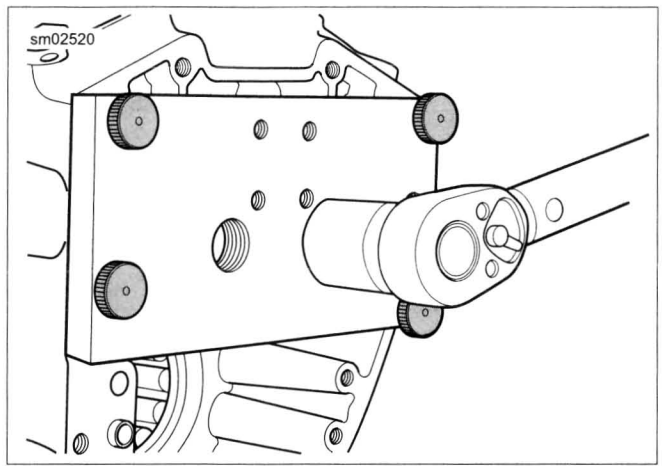


**Figure 3-96. Bearing Installation**

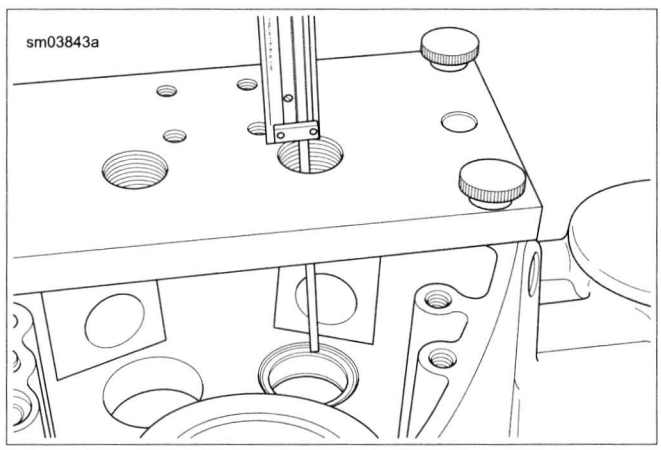


**Figure 3-97. Measure from Top of Support Plate to Edge of Needle Bearing**

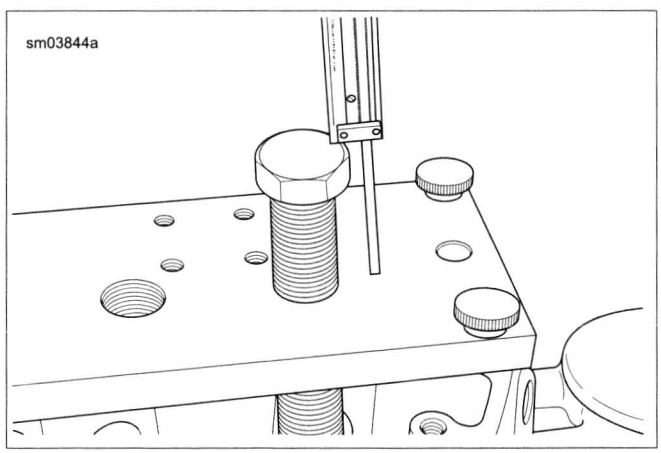


**Figure 3-98. Measure from Top of Forcing Screw to Support Plate**

## CAM SUPPORT PLATE AND COVER INSTALLATION

| PART NUMBER | TOOL NAME |
|---|---|
| HD-47941 | CRANKSHAFT/CAMSHAFT SPROCKET LOCKING TOOL |

| FASTENER | TORQUE VALUE | |
|---|---|---|
| Cam support plate screws | 100-120 **in-lbs** | 11.3-13.6 Nm |
| Oil pump screws, first torque | 40-45 **in-lbs** | 4.5-5.1 Nm |
| Oil pump screws, final torque | 90-120 **in-lbs** | 10.2-13.6 Nm |
| Cam sprocket flange bolt, first torque | 15 ft-lbs | 20.3 Nm |
| Crankshaft sprocket bolt, first torque | 15 ft-lbs | 20.3 Nm |
| Cam sprocket flange bolt, final torque | 34 ft-lbs | 46.1 Nm |
| Crankshaft sprocket bolt, final torque | 24 ft-lbs | 32.5 Nm |
| Cam chain tensioner fasteners | 100-120 **in-lbs** | 11.3-13.6 Nm |
| Cam cover screws | 125-155 **in-lbs** | 14.1-17.5 Nm |
| Timer cover screws | 20-30 **in-lbs** | 2.3-3.4 Nm |

1. See Figure 3-99. Apply a thin film of SCREAMIN' EAGLE ASSEMBLY LUBE to **new** O-ring (1). Install in groove.
2. Lubricate cam needle bearings with SCREAMIN' EAGLE ASSEMBLY LUBE.
3. Apply SCREAMIN' EAGLE ASSEMBLY LUBE to the crankshaft bore in the cam support plate.
4. See Figure 3-100. Verify that the timing marks on the ends of the camshafts are aligned.

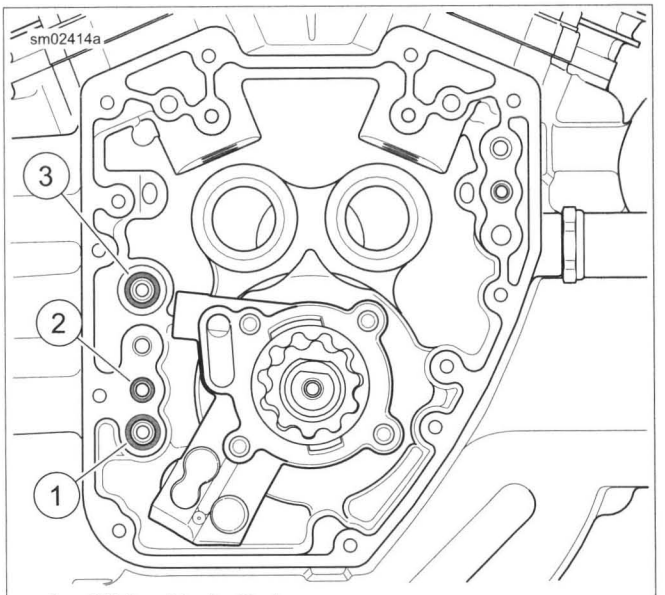


1. **Oil feed hole O-ring**
2. **Rear ring dowel**
3. **O-ring on crankcase post**

**Figure 3-99. Oil Feed Hole**

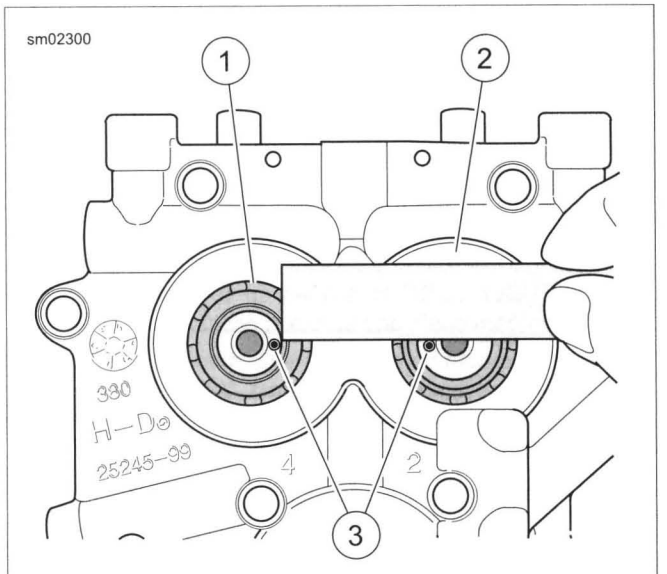


1. **Rear camshaft**
2. **Front camshaft**
3. **Timing marks**

**Figure 3-100. Verify Alignment of Timing Marks**

5. Slide cam support plate over crankshaft and onto two ring dowels in crankcase flange. Use a rubber mallet to fully seat cam support plate on ring dowels.
6. See Figure 3-101. Install cam support plate screws. Tighten to 100-120 **in-lbs** (11.3-13.6 Nm) in the sequence shown.

*NOTES*

- *Rotating the crankshaft while tightening screws allows the oil pump to find its natural center. For methods of crankshaft rotation, see 3.16 TOP END OVERHAUL: DISASSEMBLY, Rocker Arm Support Plate.*
- *Numbers cast next to the bolt holes indicate the oil pump torque sequence.*

7. See Figure 3-102. Secure oil pump.
   a. Start four screws to secure oil pump.
   b. While rotating the crankshaft, install screws (1, 2) until snug.
   c. Install screws (3, 4) until snug.
   d. Tighten all four screws to 40-45 **in-lbs** (4.5-5.1 Nm) in the sequence shown.
   e. Final tighten all four screws to 90-120 **in-lbs** (10.2-13.6 Nm) in the sequence shown.
8. With the lettering facing inboard, install rear cam sprocket spacer onto the rear camshaft.

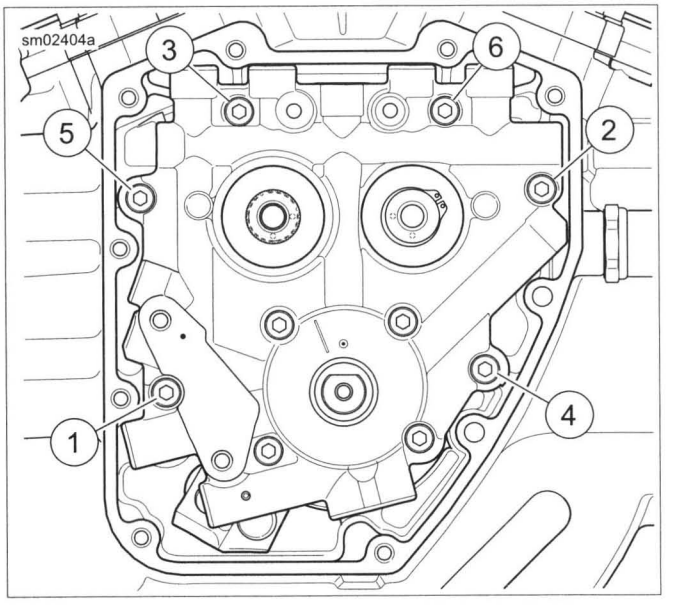


**Figure 3-101. Cam Support Plate Torque Sequence**

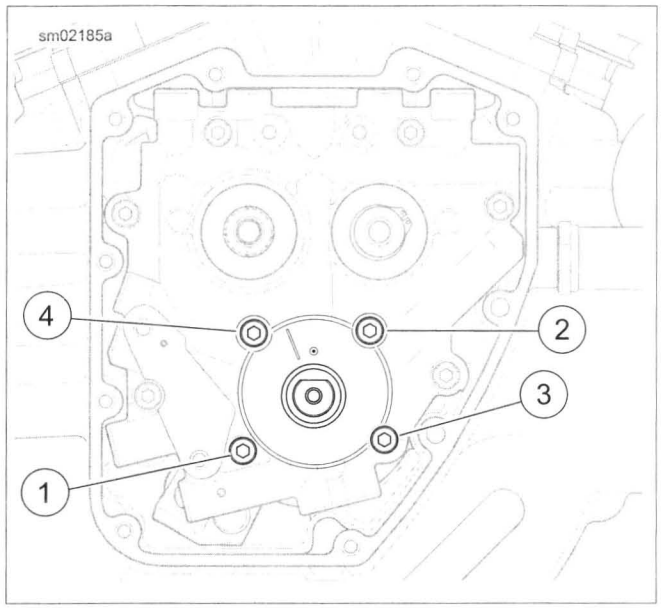


**Figure 3-102. Oil Pump Torque Sequence**

9. **Engines with one or more of the following new parts** - cam support plate, camshafts, primary cam sprocket, crankshaft sprocket or flywheel assembly:
   a. Install primary cam sprocket without chain using the long flange bolt with thicker flat washer.
   b. Install crankshaft sprocket without chain using the short flange bolt and a smaller diameter flat washer from bulk inventory.
   c. Position the CRANKSHAFT/CAMSHAFT SPROCKET LOCKING TOOL (Part No. HD-47941) between the crankshaft and primary cam sprockets. Tighten both sprocket flange bolts to 15 ft-lbs (20.3 Nm). Remove the sprocket locking tool.
   d. **Remove end play with engine in stand:** Rotate engine stand so cam compartment is pointing upward. Push on crankshaft and rear camshaft to eliminate end play.
   e. **Remove end play with engine in motorcycle:** Install compensating sprocket assembly to pull the crankshaft to the left side of the engine. Push on crankshaft and rear camshaft to eliminate end play.
   f. See Figure 3-103. Place a straightedge across the sprocket faces. Attempt to insert a 0.010 in (0.254 mm) feeler gauge between the straightedge and each sprocket face. If the feeler gauge will not fit at either location, sprocket offset is within specification. Remove both sprockets and discard temporary small washer.
   g. If measurement is not within specification, replace the rear cam sprocket spacer using Table 3-41 as a guide.
   h. Repeat alignment inspection with the **new** spacer installed. Remove both sprockets when measurement is within specification and discard temporary small washer.

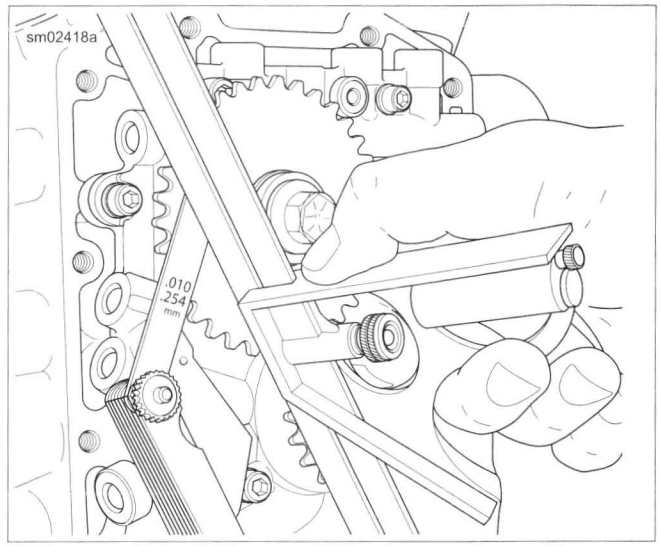


**Figure 3-103. Check Alignment of Crank and Rear Cam Sprocket Faces**

**Table 3-41. Rear Cam Sprocket Spacers**

| PART NO. | IN | MM |
|---|---|---|
| 25729-06 | 0.100 | 2.54 |
| 25731-06 | 0.110 | 2.79 |
| 25734-06 | 0.120 | 3.05 |
| 25736-06 | 0.130 | 3.30 |
| 25737-06 | 0.140 | 3.56 |
| 25738-06 | 0.150 | 3.81 |

10. See Figure 3-104. Apply a light film of SCREAMIN' EAGLE ASSEMBLY LUBE to splines on rear cam. Install the primary cam chain and sprocket assembly.
    a. Place both cam sprockets (2, 4) in the primary chain with the timing marks aligned. Verify that the marked chain link (7) is on the same side as the timing marks and is visible during installation.
    b. With the timing marks in alignment, start the rear cam sprocket onto the end of the rear camshaft. Note that the sprocket has an integral key that must be aligned with the keyway in the camshaft.
    c. Maintaining the position of the crankshaft sprocket on the chain, rotate the rear cam sprocket clockwise until the flat on the crankshaft sprocket is aligned with the flat on the crankshaft. Install the crankshaft sprocket.
11. Rotate the crankshaft clockwise until the timing marks on the sprockets are aligned and also aligned with alignment mark (5) on cam support plate.

*NOTES*

- *Both crank and rear cam sprocket flange bolts are specially hardened and the flat washers are of a special diameter.*
- *Use only genuine Harley-Davidson parts when replacement is necessary.*
- *If **new** flange bolts are not available, thoroughly clean both internal and external threads.*
- *Apply a **small** amount of LOCTITE 262 HIGH STRENGTH THREADLOCKER AND SEALANT (red) before installation.*
- *Both sprocket bolts must install freely by hand.*
- *The crankshaft and rear cam sprocket flange bolts and flat washers are **not** interchangeable.*

12. Apply a film of oil to bottom of both sprocket bolt heads and washers. Loosely install to secure sprockets.
13. Position the CRANKSHAFT/CAMSHAFT SPROCKET LOCKING TOOL (Part No. HD-47941) between the crankshaft and rear cam sprockets to prevent rotation. The handle of the tool is stamped "Crank" and "Cam" to verify proper orientation.
    a. Tighten both sprocket bolts (1, 3) to 15 ft-lbs (20.3 Nm).
    b. Loosen both bolts one revolution (360 degrees).
    c. Final tighten the rear cam sprocket bolt (1) to 34 ft-lbs (46.1 Nm).
    d. Final tighten the crank sprocket bolt (3) to 24 ft-lbs (32.5 Nm).
    e. Remove the sprocket locking tool.
14. Install primary cam chain tensioner. Tighten to 100-120 **in-lbs** (11.3-13.6 Nm).
15. Apply SCREAMIN' EAGLE ASSEMBLY LUBE to both sprockets.

*NOTE*

*Inserting a screw into a blind hole with debris can damage the crankcase.*

16. Clean all blind holes in crankcase.
17. See Figure 3-105. Install cam cover and **new** cam cover gasket.

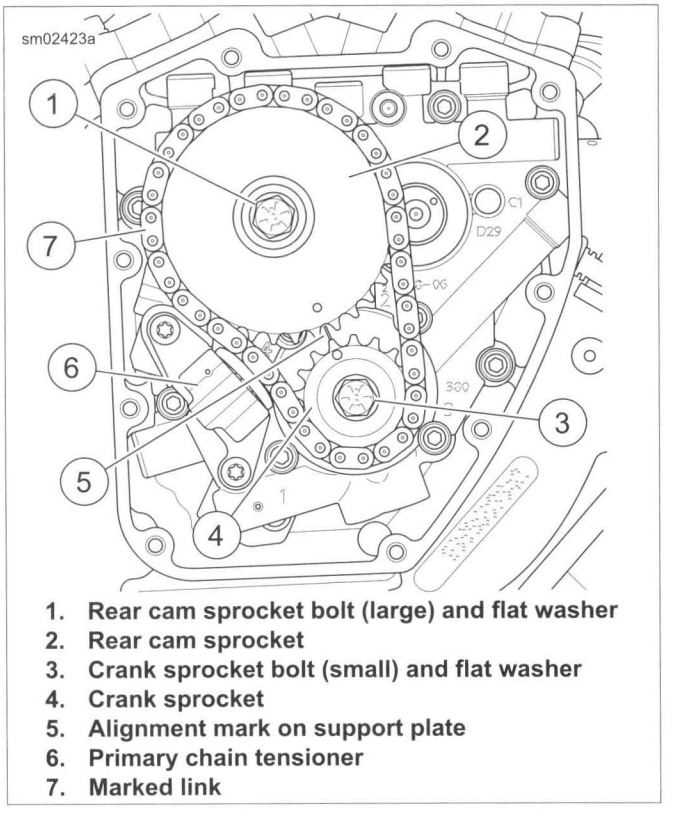


1. **Rear cam sprocket bolt (large) and flat washer**
2. **Rear cam sprocket**
3. **Crank sprocket bolt (small) and flat washer**
4. **Crank sprocket**
5. **Alignment mark on support plate**
6. **Primary chain tensioner**
7. **Marked link**

**Figure 3-104. Primary Chain and Sprockets**

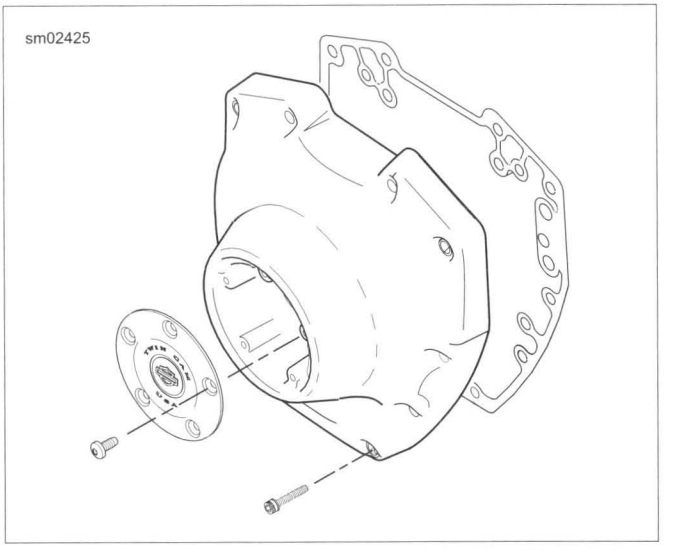


**Figure 3-105. Cam Cover Gasket**

18. See Figure 3-106. Secure cover with socket head screws. Following the sequence shown, tighten to 125-155 **in-lbs** (14.1-17.5 Nm).
19. If removed, install timer cover with five screws. Tighten to 20-30 **in-lbs** (2.3-3.4 Nm).

20. Complete motorcycle assembly.
    a. If engine was completely overhauled, see 3.23 TOP END OVERHAUL: ASSEMBLY. Perform all steps.
    b. If only cam compartment components were serviced, install pushrod covers, pushrods, rocker arm support plate and breather assembly. See appropriate topics under 3.23 TOP END OVERHAUL: ASSEMBLY.

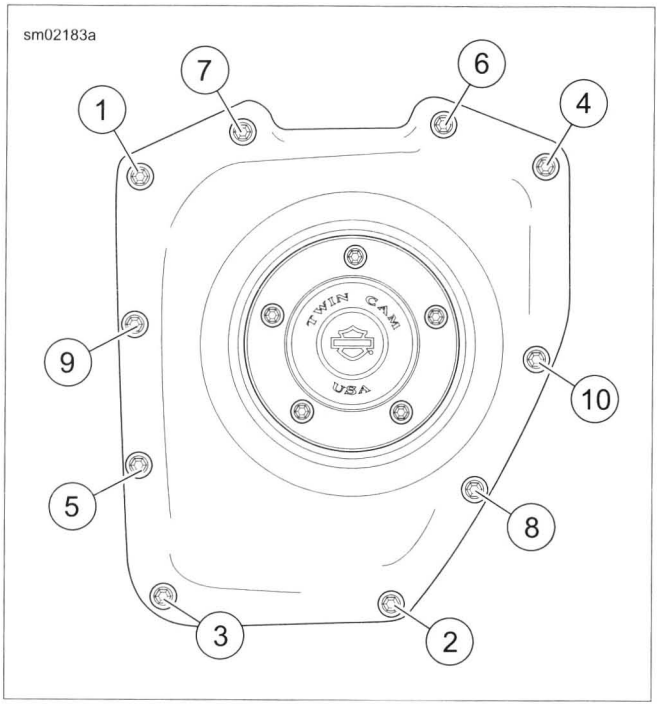


**Figure 3-106. Cam Cover Screws**

## REMOVAL

| PART NUMBER | TOOL NAME |
|---|---|
| 93979-10 | SCREAMIN' EAGLE MAGNETIC LIFTER HOLDERS |

1. See 3.16 TOP END OVERHAUL: DISASSEMBLY.
   a. Remove breather assembly.
   b. Remove rocker arm support plate.
   c. Remove pushrods and pushrod covers. Do not remove lifters or lifter covers.
   d. Support hydraulic lifters from dropping into the cam compartment using SCREAMIN' EAGLE MAGNETIC LIFTER HOLDERS (Part No. 93979-10). See 3.24 CAM COMPARTMENT AND COMPONENTS.
2. Remove cover and cam support plate. See 3.24 CAM COMPARTMENT AND COMPONENTS.
3. Carefully remove oil pump assembly from crankshaft.
4. See Figure 3-107. Remove and discard O-rings (1, 2).
5. See Figure 3-108. Disassemble and inspect oil pump components.

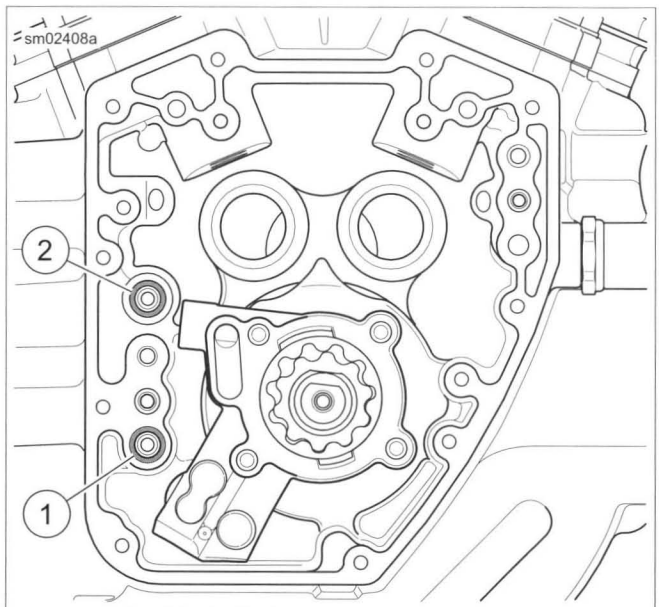


**1. Oil feed hole O-ring**
**2. O-ring on crankcase post**

**Figure 3-107. Oil Pump O-rings**

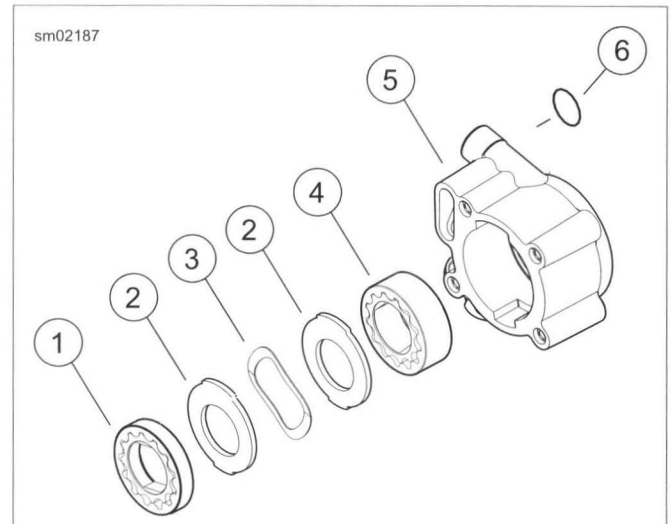


**1. Narrow gerotor set (feed)**
**2. Separator plate**
**3. Wave washer**
**4. Wide gerotor set (scavenge)**
**5. Oil pump housing**
**6. Scavenge port O-ring**

**Figure 3-108. Assembling Oil Pump**

## CLEANING AND INSPECTION

1. Clean all parts in a non-volatile cleaning solution or solvent.

**⚠WARNING**

**Compressed air can pierce the skin and flying debris from compressed air could cause serious eye injury. Wear safety glasses when working with compressed air. Never use your hand to check for air leaks or to determine air flow rates. (00061a)**

2. Dry parts using low-pressure, compressed air. Verify that all oil holes are clean and open.
3. Inspect for scoring, gouging or cracking.
4. Inspect for grooves or scratches on the cam support plate.
5. Check for excessive wear or damage on lobes of outer and inner gerotor gears.
6. See Figure 3-109. Check gerotor wear.
   a. Mesh rotors of one gerotor set together.
   b. Use a feeler gauge to determine clearance between tips of lobes on inner and outer gerotors.
   c. Replace gerotors as a set if clearance exceeds 0.004 in (0.10 mm). Inspect second gerotor set in the same manner.
7. Measure and compare thickness of each rotor in both gerotor sets. Replace the gerotor set if the difference exceeds 0.001 in (0.025 mm).
8. See Figure 3-110. Assemble the oil pump.

9. Verify that feed gerotors extend past the oil pump surface 0.015-0.025 in (0.38-0.64 mm).
10. If measurement is less than 0.015 in (0.38 mm), remove feed gerotor set and assemble using **new** wave washer.
11. Repeat measurement and replace oil pump body if not within specification.

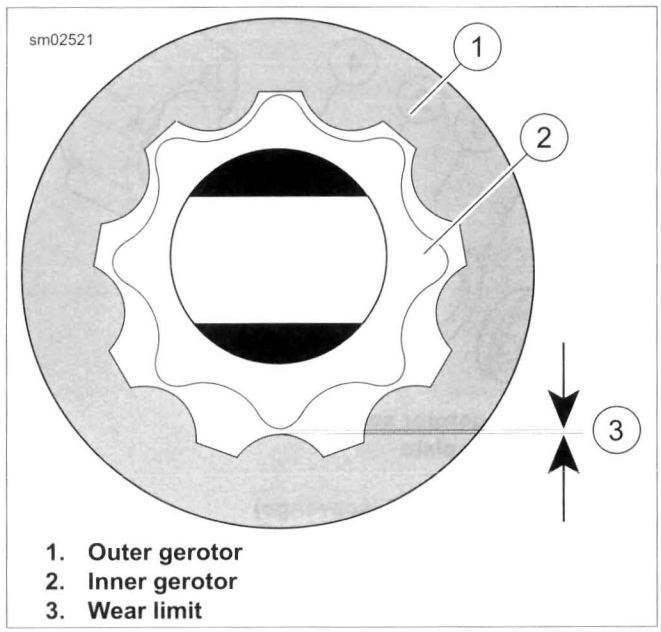


1. **Outer gerotor**
2. **Inner gerotor**
3. **Wear limit**

**Figure 3-109. Measure Gerotor Sets for Wear**

## INSTALLATION

*NOTE*

*Lubricate parts with SCREAMIN' EAGLE ASSEMBLY LUBE during assembly.*

1. See Figure 3-110. Apply a very thin film of SCREAMIN' EAGLE ASSEMBLY LUBE to **new** scavenge port stub O-ring (6). Install O-ring on scavenge port of oil pump housing.
2. Slide oil pump housing (5) onto crankshaft while fitting O-ring on scavenge port into crankcase bore.
   a. Firmly push on scavenge port with thumb to verify that it is snug in bore.
   b. Inspect O-ring to verify that it is not pinched or distorted.
3. Assemble the wide gerotor set (4). Install on the crankshaft until it bottoms in the oil pump housing.
4. Install inner separator plate (2) on the crankshaft until it contacts the wide gerotor set (4). Install wave washer (3) and outer separator plate (2).
5. Assemble the narrow gerotor set (1). Install on the crankshaft until it contacts the outer separator plate (2).
6. See Figure 3-111. Apply a very thin film of SCREAMIN' EAGLE ASSEMBLY LUBE to **new** O-ring (3) for crankcase post. Install **new** O-ring in groove on crankcase post.
7. Complete engine assembly. See 3.24 CAM COMPARTMENT AND COMPONENTS and 3.23 TOP END OVERHAUL: ASSEMBLY.

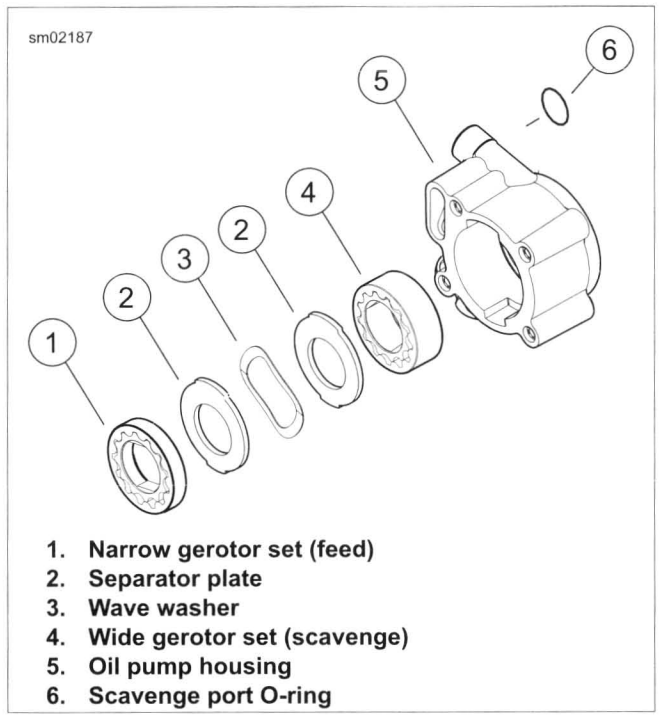


1. **Narrow gerotor set (feed)**
2. **Separator plate**
3. **Wave washer**
4. **Wide gerotor set (scavenge)**
5. **Oil pump housing**
6. **Scavenge port O-ring**

**Figure 3-110. Assembling Oil Pump**

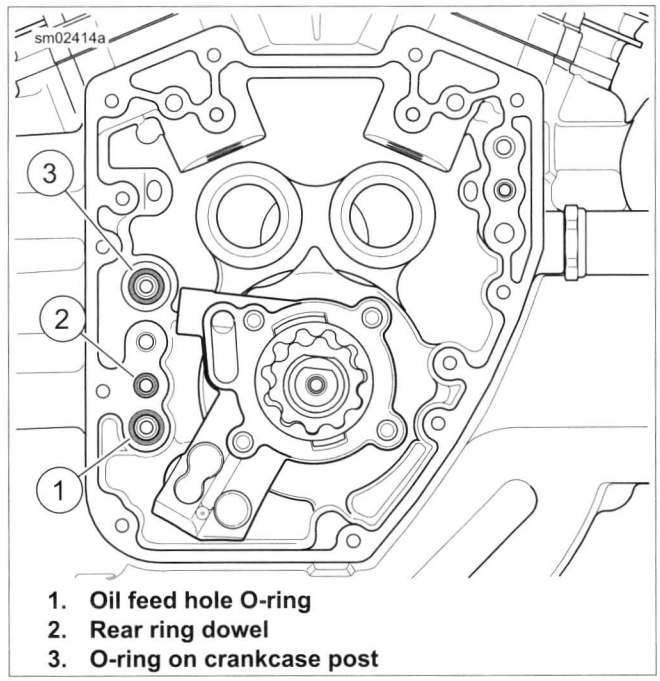


1. **Oil feed hole O-ring**
2. **Rear ring dowel**
3. **O-ring on crankcase post**

**Figure 3-111. Oil Feed Hole**

## CRANKCASE DISASSEMBLY

1. Remove oil pump from crankshaft.

**⚠CAUTION**

**Do not rotate crankcase half in engine stand when flywheel is installed. The flywheel assembly can fall out, resulting in parts damage or moderate injury. (00552c)**

2. Rotate crankcase in engine stand so that cam cover flange is facing upward.
3. See Figure 3-112. Remove the nine crankcase bolts in the sequence shown.

*NOTE*

*Never move or lift the crankcase by grasping the cylinder studs. The crankcase is too heavy to be carried in this manner and could be dropped.*

4. Separate case halves. Lift right crankcase half off end of crankshaft.
5. See Figure 3-113. Remove two dowel pins in split line face of right case half.
6. Remove flywheel assembly from the crankcase. Inspect crankshaft/flywheel assembly. See 3.27 FLYWHEEL AND CONNECTING RODS.

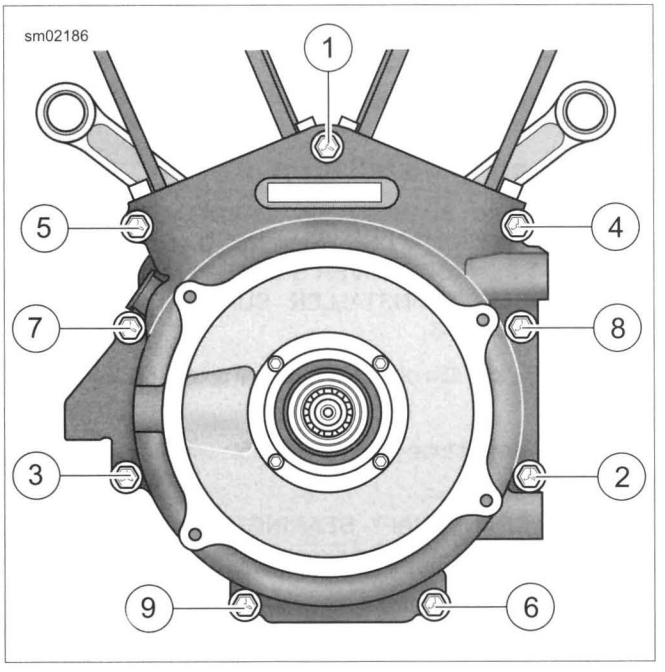


**Figure 3-112. Crankcase Bolt Sequence**

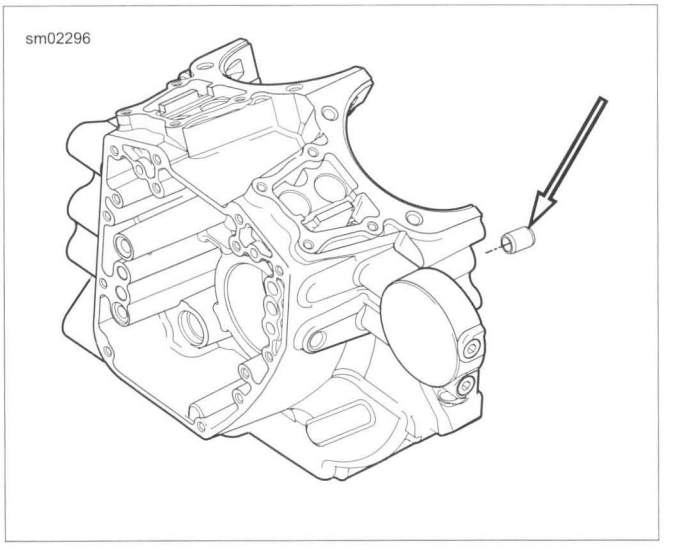


**Figure 3-113. Right Crankcase Forward Dowel Pin (Rear Dowel Pin Not Shown)**

## CLEANING AND INSPECTION

1. Remove all gasket material from the crankcase flanges.
2. Clean all parts in a non-volatile cleaning solution or solvent.

**⚠WARNING**

**Compressed air can pierce the skin and flying debris from compressed air could cause serious eye injury. Wear safety glasses when working with compressed air. Never use your hand to check for air leaks or to determine air flow rates. (00061a)**

3. Dry parts with moisture-free compressed air.
4. Verify that all oil holes are clean and open.
5. Check ring dowels for looseness, wear or damage. Replace if necessary.
6. Use a file to carefully remove any nicks or burrs from machined surfaces.
7. Clean out tapped holes and clean up damaged threads.
8. Check the top of the crankcase for flatness with a straightedge and feeler gauge. Replace if warped.
9. Spray all machined surfaces with clean engine oil.
10. Inspect crankshaft/flywheel assembly. See 3.27 FLYWHEEL AND CONNECTING RODS.

## RIGHT CRANKCASE HALF

| PART NUMBER | TOOL NAME |
|---|---|
| B-45655 | CRANKCASE BEARING REMOVER/INSTALLER |
| HD-42720-4 | CRANKSHAFT BEARING DRIVER SHIM |
| HD-42720-5 | REMOVER/INSTALLER SUPPORT TUBE |

| FASTENER | TORQUE VALUE | |
|---|---|---|
| Main bearing, right, retaining screws | 40-70 **in-lbs** | 4.5-7.9 Nm |
| Piston jet screws | 25-35 **in-lbs** | 2.8-3.9 Nm |

### Main Bearing Removal

*NOTE*

*Never move or lift the crankcase by grasping the cylinder studs. The crankcase is too heavy to be carried in this manner and could be dropped.*

1. See Figure 3-116. Remove two main bearing retaining screws (5) from the cam compartment side.
2. See Figure 3-114. Obtain CRANKCASE BEARING REMOVER/INSTALLER (Part No. B-45655) and REMOVER/INSTALLER SUPPORT TUBE (Part No. HD-42720-5).
3. Place support tube (4) on hydraulic press table with the end marked "A" up.
4. With the cam compartment side facing downward, position main bearing bore over support tube.
5. Slide remover/installer (1) through bearing into support tube.
6. Center remover/installer under ram (3) of press. Apply pressure until bearing is free.
7. Remove crankcase, remover/installer and bearing from support tube. Discard bearing.

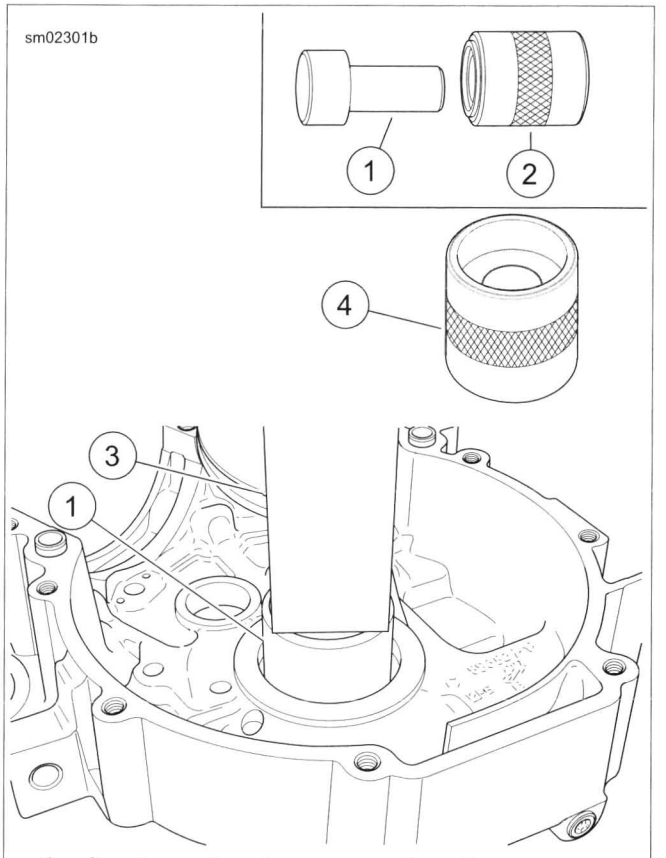


1. **Crankcase bearing remover/installer**
2. **Support tube**
3. **Ram**
4. **Support tube ("A" end up)**

**Figure 3-114. Right Main Bearing Removal**

### Main Bearing Installation

1. See Figure 3-115. Obtain CRANKCASE BEARING REMOVER/INSTALLER (Part No. B-45655), CRANKSHAFT BEARING DRIVER SHIM (Part No. HD-42720-4) and REMOVER/INSTALLER SUPPORT TUBE (Part No. HD-42720-5).
2. Spread a thin film of clean engine oil on OD of **new** bearing (5).
3. Place support tube (3) on press table with the end marked "B" up.
4. Place CRANKSHAFT BEARING DRIVER SHIM (Part No. HD-42720-4) (2) on support tube (3).
5. With the cam compartment side facing upward, position main bearing bore over support tube.
6. Start the **new** bearing in bearing bore with the lettering facing into the cam compartment (up).
7. Slide remover/installer (1) through bearing into support tube.
8. Center remover/installer under ram (4) of press. Apply pressure until resistance is felt and bearing is bottomed on the support tube.
9. Remove remover/installer and crankcase half from support tube.

*NOTES*

- *Verify that the bearing is flush or slightly below the surface of the crankcase. Never push the bearing into position using the retaining screws.*
- *If **new** retaining screws are not available, apply LOCTITE 243 MEDIUM STRENGTH THREADLOCKER AND SEALANT (blue).*

10. See Figure 3-116. Install two **new** main bearing retaining screws (5). Tighten to 40-70 **in-lbs** (4.5-7.9 Nm).

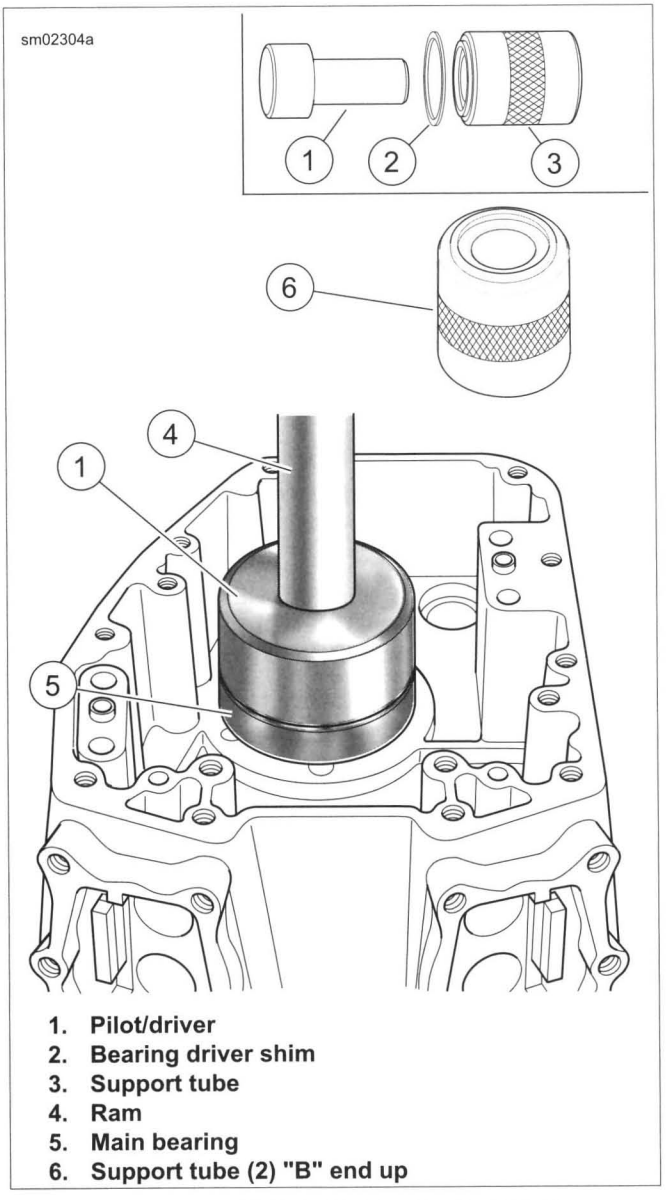


1. **Pilot/driver**
2. **Bearing driver shim**
3. **Support tube**
4. **Ram**
5. **Main bearing**
6. **Support tube (2) "B" end up**

**Figure 3-115. Right Main Bearing Installation**

## Piston Jets Removal

1. See Figure 3-116. Remove two screws (1) to free piston jet (2) from crankcase.
2. Remove O-ring (3) from groove in mounting flange of jet. Discard O-ring.

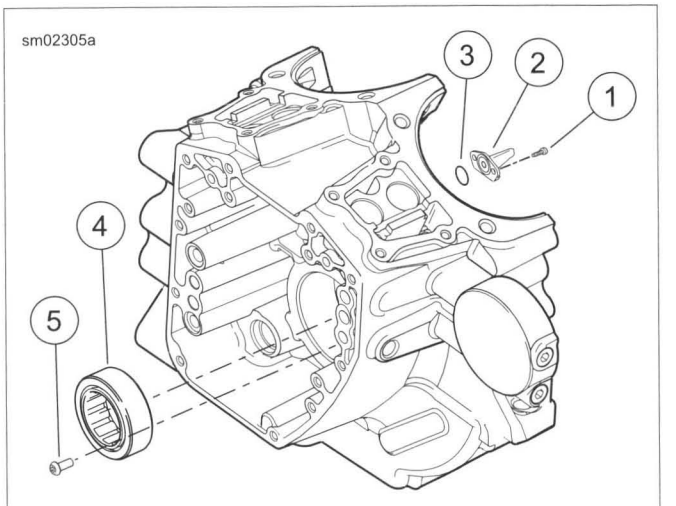


1. **Screw (2 each jet)**
2. **Piston jet (2)**
3. **O-ring (2)**
4. **Main bearing**
5. **Screw (2)**

**Figure 3-116. Piston Jets**

## Piston Jets Installation

1. See Figure 3-116. Apply a very thin film of clean engine oil to **new** O-ring (3). Install **new** O-ring in groove of jet mounting flange.

*NOTE*

*If piston jet is being reused, apply LOCTITE 222 LOW STRENGTH THREADLOCKER AND SEALANT (purple) to screws.*

2. With jet pointed upward, secure piston jet (2) with two screws (1). Tighten to 25-35 **in-lbs** (2.8-3.9 Nm).

# LEFT CRANKCASE HALF

| PART NUMBER | TOOL NAME |
|---|---|
| B-45655 | CRANKCASE BEARING REMOVER/INSTALLER |
| HD-42720-5 | REMOVER/INSTALLER SUPPORT TUBE |

## Main Bearing Removal

**⚠CAUTION**

**Do not rotate crankcase half in engine stand when flywheel is installed. The flywheel assembly can fall out, resulting in parts damage or moderate injury. (00552c)**

*NOTE*

*Never move or lift the crankcase by grasping the cylinder studs. The crankcase is too heavy to be carried in this manner and could be dropped.*

1. Hold flywheel assembly to prevent it from falling out of left crankcase half. Rotate bottom end assembly in engine stand so assembly is upright and flywheel shafts are horizontal.

2. Carefully slide flywheel assembly out of left crankcase and place it in a clean safe place.
3. Remove thrust washer from outboard side of crankcase half by pulling it past oil seal. Set thrust washer aside for inspection or reuse.
4. Remove oil seal from crankcase bore. Discard oil seal.
5. See Figure 3-117. Using a flat blade screwdriver, carefully lift edge of bearing retaining ring up out of its groove in crankcase.
6. Slide screwdriver tip around edge of bearing, lifting retaining ring up and out of groove. Do not damage lip of groove in crankcase.

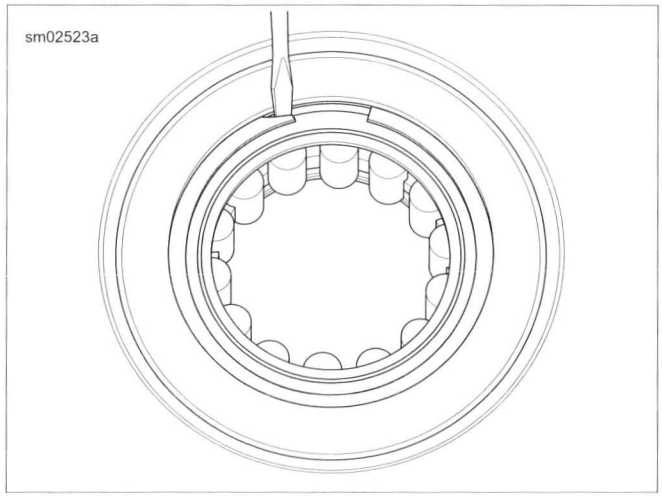


**Figure 3-117. Removing Retaining Ring**

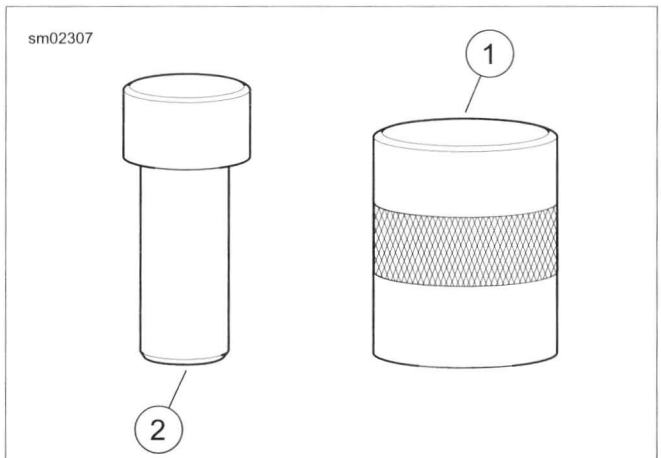


1. **Support tube**
2. **Pilot/driver**

**Figure 3-118. Left Main Bearing Remover and Installer Tools**

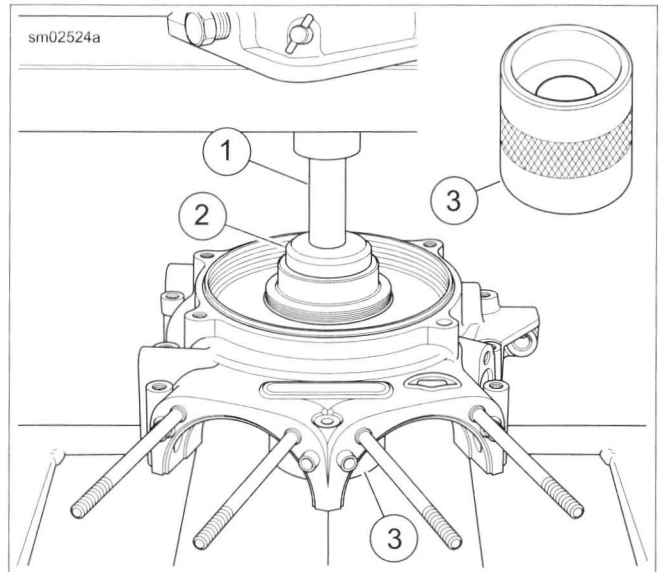


1. **Ram**
2. **Pilot/driver**
3. **Support tube ("A" end up)**

**Figure 3-119. Left Main Bearing Removal**

*NOTE*

*See Figure 3-118. If the ram of the press is wider than the head of pilot/driver (2), use a suitable press plug to remove the main bearing.*

7. Obtain CRANKCASE BEARING REMOVER/INSTALLER (Part No. B-45655) and REMOVER/INSTALLER SUPPORT TUBE (Part No. HD-42720-5).
8. See Figure 3-119. Place support tube (3) on press table with end marked "A" up.
9. With the outboard side of the left crankcase half facing upward, position main bearing bore over support tube.
10. Slide remover/installer (2) through the main bearing into support tube (3).
11. Center remover/installer under ram (1) of press. Apply pressure to pilot/driver until bearing is free.
12. Remove crankcase half, remover/installer and bearing from support tube. Discard bearing.

## Main Bearing Installation

*NOTES*

- *Never move or lift the crankcase by grasping the cylinder studs. The crankcase is too heavy to be carried in this manner and could be dropped.*
- *Always replace sprocket shaft bearing inner race whenever left main bearing is replaced. See 3.26 CRANKCASE DISASSEMBLY AND REPAIR, Sprocket Shaft Bearing Inner Race.*

1. See Figure 3-118. Obtain CRANKCASE BEARING REMOVER/INSTALLER (Part No. B-45655) and REMOVER/INSTALLER SUPPORT TUBE (Part No. HD-42720-5).

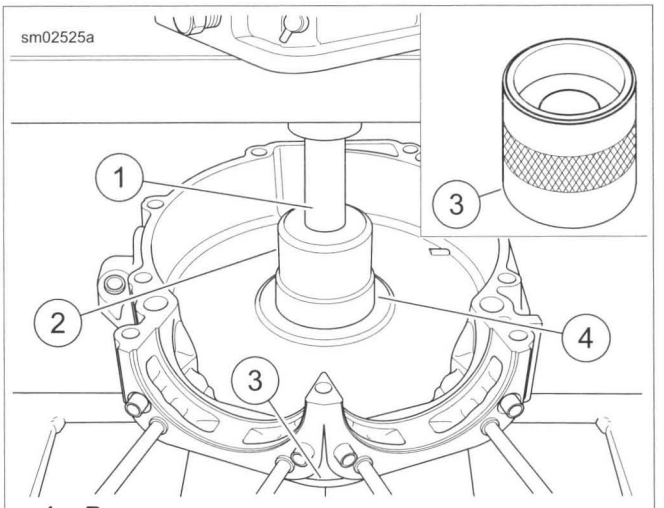


1. **Ram**
2. **Remover/installer**
3. **Support tube ("A" end up)**
4. **Main bearing**

**Figure 3-120. Left Main Bearing Installation**

2. See Figure 3-120. Place a thin film of clean engine oil on outer diameter of **new** main bearing (4).
3. Place support tube (3) on hydraulic press table with the end marked "A" up.
4. With the inboard side of the left crankcase half facing up, position main bearing bore over support tube.
5. Start **new** main bearing in bearing bore, letter side down.
6. Slide remover/installer (2) through bearing into support tube.
7. Apply pressure to until bearing is lightly bottomed in main bearing bore.
8. Remove crankcase half and remover/installer from support tube.
9. Install **new** retaining ring in bearing bore groove, being careful not to damage edges of groove. Make sure that retaining ring is fully seated in groove.

*NOTE*

*If retaining ring will not fit into groove, the bearing is not fully seated in the bore. Inspect bearing and bore. If necessary, remove bearing, clean bore and install bearing. Install retaining ring.*

## SPROCKET SHAFT BEARING INNER RACE

| PART NUMBER | TOOL NAME |
|---|---|
| HD-25070 | ROBINAIR HEAT GUN |
| HD-34902-B | MAINSHAFT BEARING INNER RACE PULLER/INSTALLER |
| HD-44358 | FLYWHEEL SUPPORT FIXTURE |
| HD-95637-46B | WEDGE ATTACHMENT |
| HD-97225-55C | SPROCKET SHAFT BEARING INSTALLER |

### Removal

If reusing flywheel, remove bearing inner race and thrust washer from sprocket shaft:

1. See Figure 3-121. Obtain FLYWHEEL SUPPORT FIXTURE (Part No. HD-44358). Clamp tool in soft-jawed vise with the round hole topside.
2. Insert crankshaft end through hole, resting flywheel assembly on fixture. Slide knurled locating pin down slot in tool to engage crank pin hole. Hand-tighten locating pin.
3. Secure flywheel with hold-down clamps (2).

*NOTE*

*For proper clamping force, hold-down clamp must not be tilted. Rotate hex on outboard stud until clamp is level.*

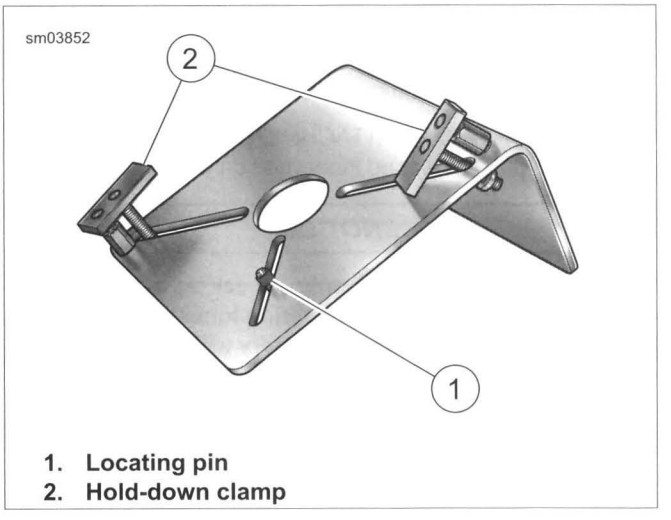


1. **Locating pin**
2. **Hold-down clamp**

**Figure 3-121. Flywheel Holding Fixture**

4. See Figure 3-122. Position WEDGE ATTACHMENT (Part No. HD-95637-46B) (5) on inboard side of thrust washer. Turn hex nuts an equal number of turns to draw halves of wedge together.

***NOTICE***

**Install wedge attachment only so far as necessary to ensure positive contact with bearing inner race. Installing tool with more contact than necessary will result in damage to the flywheel (00500b)**

5. Obtain two 3/8-16 bolts 7-1/2 in long and flat washers. Install flat washers on bolts. Obtain bridge and forcing screw from MAINSHAFT BEARING INNER RACE

PULLER/INSTALLER (Part No. HD-34902-B). Also obtain a suitable hardened washer to use between the puller screw and the end of the shaft.

6. Slide one bolt through each side of bridge with flat washer between bridge and bolt head. Turn bolts into wedge attachment an equal number of turns.
7. Sparingly apply graphite lubricant to threads of forcing screw to prolong service life and provide smooth operation. Start the forcing screw into center hole of bridge.

*NOTE*

*Failure to use hardened washer may result in damage to forcing screw or sprocket shaft.*

8. Place hardened washer against end of sprocket shaft. Turn forcing screw into bridge until the steel ball at the end of the screw makes firm contact with hardened washer.

**⚠WARNING**

**Do not use heating devices with penetrating oil. Penetrating oil is flammable which could result in death or serious injury. (00375a)**

9. Using the ROBINAIR HEAT GUN (Part No. HD-25070), uniformly heat the bearing inner race for about 30 seconds using a circular motion.

*NOTE*

*To assist removal without heat, apply a light penetrating oil to shaft and leading edge of bearing inner race.*

10. Turn forcing screw until thrust washer and bearing inner race move approximately 1/8 in (3.2 mm).
11. Reposition WEDGE ATTACHMENT (Part No. HD-95637-46B) to pull on bearing inner race only.

***NOTICE***

**Install wedge attachment only so far as necessary to ensure positive contact with bearing inner race. Installing tool with more contact than necessary will result in damage to the flywheel (00500b)**

12. See Figure 3-122. Verify that the tool assembly is square, so that the inner race remains straight during removal.
13. Using the ROBINAIR HEAT GUN (Part No. HD-25070), uniformly heat the bearing inner race in a circular motion for about 30 seconds.

*NOTE*

*To assist removal without heat, apply a light penetrating oil to shaft and leading edge of bearing inner race.*

14. Turn forcing screw until bearing inner race is pulled free of sprocket shaft.
15. Remove thrust washer from sprocket shaft.

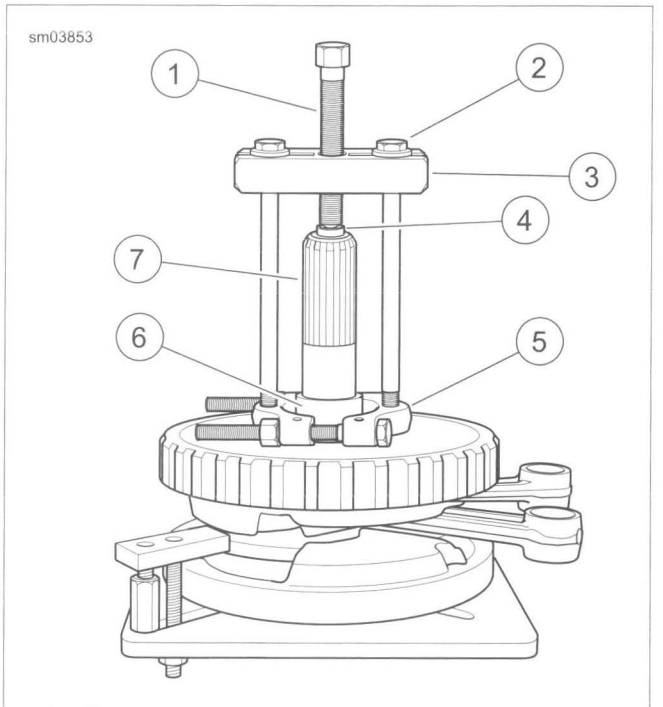


1. **Forcing screw**
2. **3/8-16 bolt with flat washer**
3. **Bridge**
4. **Hardened washer**
5. **Wedge attachment**
6. **Bearing inner race**
7. **Sprocket shaft**

**Figure 3-122. Remove Inner Race from Sprocket Shaft**

## Installation

1. Place **new** thrust washer over sprocket shaft.
2. Place **new** bearing inner race on bench top. Using the ROBINAIR HEAT GUN (Part No. HD-25070), uniformly heat bearing inner race in a circular motion for about 60 seconds.
3. Wearing suitable gloves to protect hands from burns, place heated bearing inner race over sprocket shaft.

**⚠WARNING**

**Do not use heating devices with penetrating oil. Penetrating oil is flammable which could result in death or serious injury. (00375a)**

*NOTE*

*To assist installation without heat, apply a light penetrating oil to shaft and leading edge of bearing inner race.*

4. See Figure 3-123. Obtain the SPROCKET SHAFT BEARING INSTALLER (Part No. HD-97225-55C). Assemble tool as described below.
   a. See Figure 3-124. Turn pilot adapter into sprocket shaft.
   b. Turn pilot shaft onto pilot adapter.
   c. Slide long collar over pilot shaft until it contacts bearing inner race.
   d. Slide short collar over pilot shaft until it contacts long collar.
   e. Slide bearing and large flat washer over pilot shaft.
   f. Sparingly apply graphite lubricant to the pilot shaft to prolong service life and provide smooth operation.
   g. See Figure 3-125. Turn handle onto pilot shaft.
5. See Figure 3-126. Rotate handle of tool clockwise until bearing inner race makes firm contact with thrust washer. Verify that thrust washer cannot be rotated by hand.
6. Remove bearing installer components from sprocket shaft.

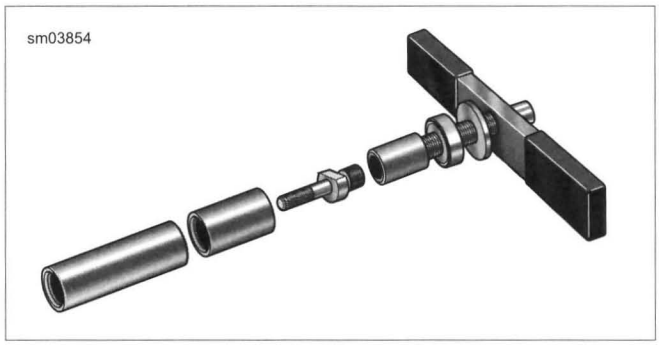


**Figure 3-123. Sprocket Shaft Bearing Installer**

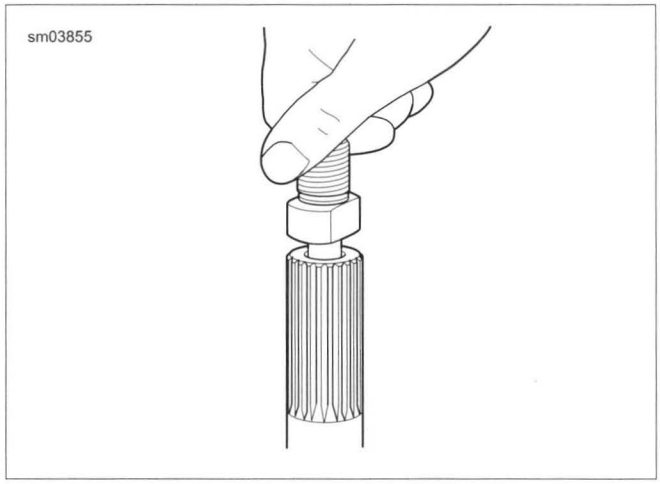


**Figure 3-124. Pilot Adapter**

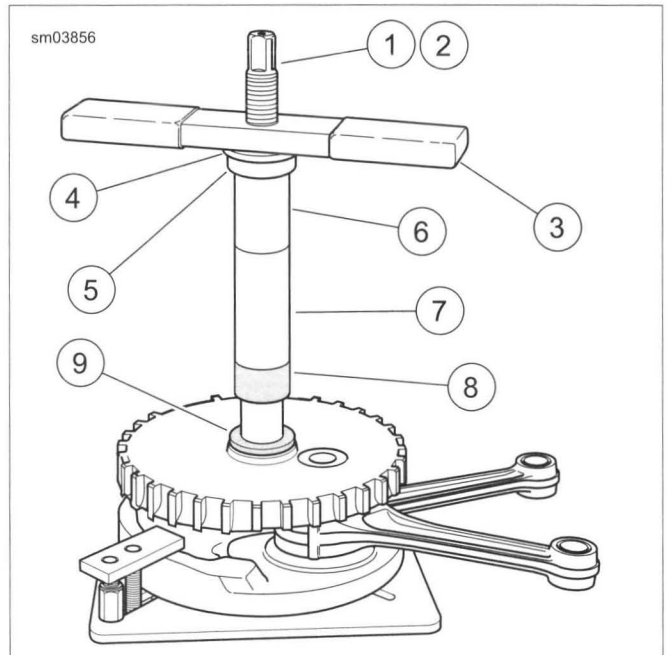


1. **Pilot adapter**
2. **Pilot shaft**
3. **Handle**
4. **Flat washer**
5. **Bearing**
6. **Short collar**
7. **Long collar**
8. **Inner race**
9. **Thrust washer**

**Figure 3-125. Press Inner Race onto Sprocket Shaft: Setup**

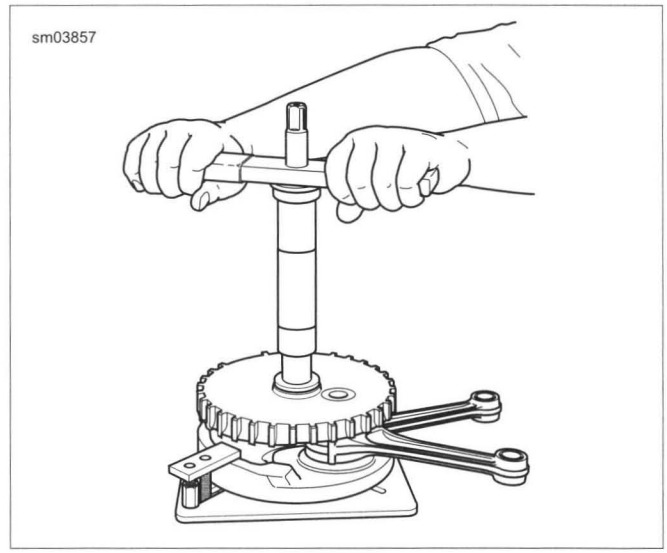


**Figure 3-126. Press Inner Race onto Sprocket Shaft: Operation**

## CYLINDER STUDS

| FASTENER | TORQUE VALUE | |
|---|---|---|
| Cylinder stud | 120-240 **in-lbs** | 13.6-27.1 Nm |

### Removal

1. Tighten two nuts together on threads of stud.
2. Place wrench on lower nut. Turn to remove stud.

### Installation

1. Place a steel ball inside a head screw. Put the head screw on the end of the cylinder stud without the collar.
2. Start the stud in the cylinder deck with the collar side down. Tighten using air gun until collar reaches crankcase.
3. Hand-tighten stud to 120-240 **in-lbs** (13.6-27.1 Nm).

## PIPE PLUG AND OIL FITTINGS

| FASTENER | TORQUE VALUE | |
|---|---|---|
| Crankcase pipe plugs | 120-144 **in-lbs** | 13.6-16.3 Nm |

### Removal

See Figure 3-127. Turn pipe plug counterclockwise until free.

### Installation

1. Apply LOCTITE 565 THREAD SEALANT to threads.
2. Install pipe plug. Tighten to 120-144 **in-lbs** (13.6-16.3 Nm).

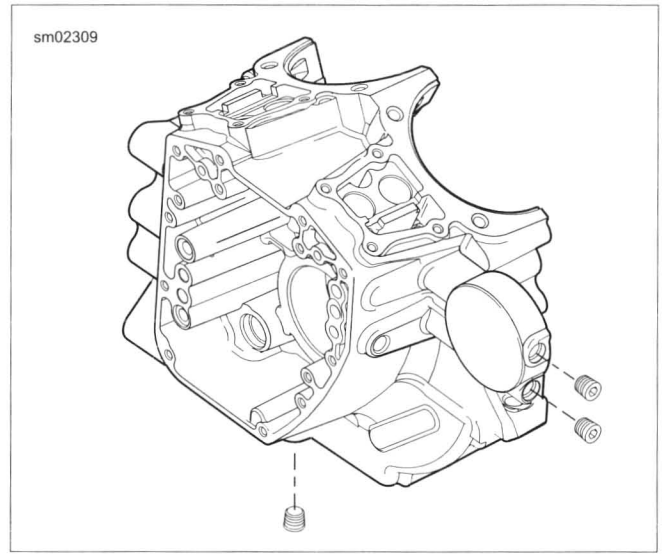


**Figure 3-127. Pipe Plug**

## SYMPTOMS

### Overview

Flywheels that shift out of true at the crank pin generally exhibit one of two symptoms: no oil pressure or vibration. This condition is also known as scissored flywheels.

### No Oil Pressure

When the crankshaft shifts more than 0.015 in (0.381 mm), it can break the oil pump gerotors. This causes a loss of oil pressure.

If a low or no oil pressure condition is confirmed, inspect the oil pump and cam support plate. If the oil pump gerotors are bound or damaged, the cause is likely from a contaminant running through the pump or a shifted crankshaft. If this type of damage is found, always replace the oil lines and clean all debris from the entire lubrication system. See 1.23 TROUBLESHOOTING for general diagnostics of low oil pressure.

### Vibration

Generally, left crankshaft runout must exceed 0.020 in (0.508 mm) to be noticeable to the rider. It is much more likely that vibration issues are resolved by following the checklist in 1.23 TROUBLESHOOTING.

If correct chassis set-up has been verified and other items in 1.23 TROUBLESHOOTING have been eliminated, checking left crankshaft runout is appropriate.

## INSPECTION

*NOTE*

*Do not attempt to straighten connecting rods. Straightening rods damage both the upper bushing and lower bearing.*

1. Replace the flywheel/connecting rod assembly if any of the following conditions are noted:
   a. Bent or twisted connecting rods
   b. Connecting rods do not fall under their own weight or are in a bind
   c. Sprocket teeth are worn in an irregular pattern or chipped
   d. The crankshaft (roller) bearing inner races are brinelled, burnt, scored, blued or damaged
   e. Crankshaft runout exceeds specification

*NOTE*

*Bluing on connecting rods is part of the hardening process and is considered a normal condition.*

2. Check connecting rod bearing clearance. Place the assembly as shown in Figure 3-128.
   a. Holding the shank of each rod just above the bearing bore, pull up and down on the connecting rods.
   b. Any up and down movement indicates excessive lower bearing clearance. Replace the flywheel/connecting rod assembly.
3. Measure crankshaft runout if the crankshaft is suspected of being out-of-true.

*NOTE*

*If the flywheel, connecting rods or right side bearing inner race require replacement, replace the entire flywheel assembly.*

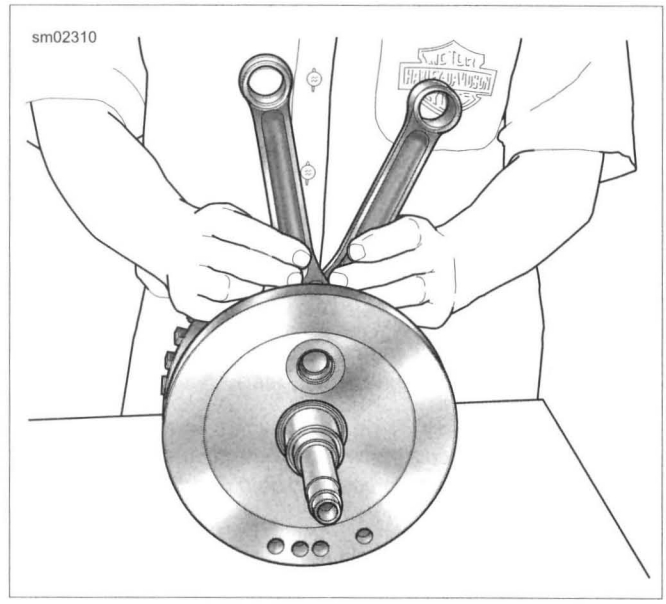


**Figure 3-128. Connecting Rod Bearing Clearance**

## MEASURING CRANKSHAFT RUNOUT

### Crankshaft Installed

*NOTES*

- *Perform the following checks during engine disassembly as a method to determine condition of crankshaft and whether crankshaft is suitable for reuse. The checks can be done with the engine either installed in the frame or removed.*
- *Dial indicators must be set up and zeroed* ***perpendicular to the shaft in both directions****. The indicator must be 90 degrees when viewed from the end and from the side.*
- *For a reliable reading, only measure on the cam support plate bushing machined surface of the crankshaft, never on a shaft adapter or the bolt holes.*
- *Never secure the dial indicator base to the vehicle frame. Movement within the engine mounts will result in a false reading.*
- *While rotating the crankshaft, the indicator needle may move to both the minus and plus sides of zero. The total indicator reading is the value to record.*

1. **Right Side**
   a. Remove spark plugs.
   b. Remove the cam support plate. See 3.11 CAM COMPARTMENT SERVICE.
   c. Secure a dial indicator base to a stable location (crankcase, engine stand, etc.).

NOTE

*To obtain an accurate measurement, the dial indicator must be set up perpendicular in both directions to the shaft being measured.*

d. Attach a dial indicator and set it up to measure runout at the cam plate bearing contact area of the crankshaft. Adjust the indicator to zero.

e. Slowly rotate the crankshaft one complete revolution and record the total needle movement.

f. Compare results of measurements. If the total indicator reading exceeds service wear limit, the crankshaft/flywheel assembly should be removed and checked on a truing stand. Refer to Table 3-42.

2. **Left Side**

a. Remove spark plugs.

b. Remove the primary cover and compensating sprocket. See 5.4 DRIVE COMPONENTS.

c. Secure a dial indicator base to a stable location (crankcase, engine stand, etc.).

NOTE

*To obtain an accurate measurement, the dial indicator must be set up perpendicular in both directions to the shaft being measured.*

d. Attach a dial indicator set up to measure runout near the end of the splined area of the crankshaft. Adjust the indicator to zero on the "high" part of one spline.

e. Mark the crankshaft and crankcase to use as reference for the amount of rotation.

NOTE

*Pay attention to only the values from the "high" part of the splines.*

f. Slowly rotate the crankshaft one complete revolution and record the total needle movement.

g. Compare results to Table 3-42. If the total indicator reading exceeds service wear limit, remove the crankshaft/flywheel assembly and check on a truing stand.

## Crankshaft Removed

NOTES

- *The following procedure should be performed if the crankshaft/flywheel assembly is suspected of being out-of-true.*
- *The crankshaft must be supported by the bearing races during inspection. Never use centers as the holes may not be perfectly centered.*
- *Verify that the bearing races are in good condition and suitable for performing this inspection.*

1. See Figure 3-129. Mount crankshaft in truing stand so it is supported on the bearing races (1) by the roller supports (2).

2. Secure a dial indicator mount near each end of the crankshaft.

NOTE

*Dial indicators must be perpendicular to the shaft in both directions.*

3. Set up each indicator (3) to measure the machined surface (4) on one end and splines (5) on the other.

4. Adjust both indicators to zero.

5. Slowly rotate the crankshaft assembly while observing the total indicator reading.

NOTE

*Twin Cam crankshaft/flywheel assemblies are not serviceable. Replace parts not within specifications.*

6. Compare results of measurements. If the total indicator reading exceeds service wear limit, replace the crankshaft/flywheel assembly. Refer to Table 3-42.

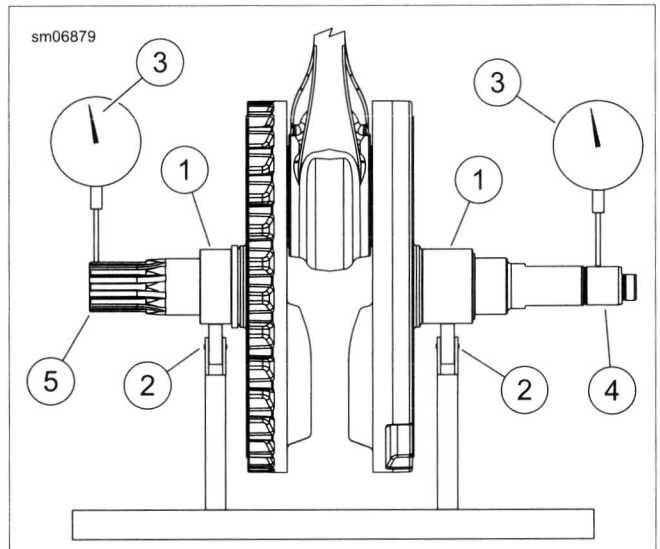


1. **Bearing race**
2. **Roller support**
3. **Dial indicator**
4. **Machined surface**
5. **Spline**

**Figure 3-129. Checking Crankshaft Runout**

**Table 3-42. Flywheel**

| FLYWHEEL | REPLACE IF WEAR EXCEEDS | |
|---|---|---|
| | IN | MM |
| Runout (shaft measured in case) | 0.012 | 0.305 |
| Runout (measured in truing stand) | 0.005 | 0.127 |
| End play | 0.013 | 0.330 |

## CRANKCASE ASSEMBLY

| PART NUMBER | TOOL NAME |
|---|---|
| 99650-02 | HIGH-PERFORMANCE SEALANT, GRAY |
| HD-39361-B | SPROCKET SHAFT OIL SEAL INSTALLER |
| HD-42326-B | CRANKSHAFT GUIDE |
| HD-97225-55C | SPROCKET SHAFT BEARING INSTALLER |

| FASTENER | TORQUE VALUE | |
|---|---|---|
| Crankcase screws, first torque | 120 **in-lbs** | 13.6 Nm |
| Crankcase screws, final torque | 15-19 ft-lbs | 20.3-25.8 Nm |

1. Secure left crankcase half upright in engine stand.
2. Apply a liberal amount of SCREAMIN' EAGLE ASSEMBLY LUBE to both main bearings. Work into bearings to distribute lube.
3. Slide CRANKSHAFT GUIDE (Part No. HD-42326-B) onto flywheel sprocket shaft.
4. Slide flywheel assembly into left crankcase half. Remove crankshaft guide tool.
5. Rotate crankcase assembly so flywheel pinion shaft is pointing straight up.
6. Verify that both dowel pins are installed in split line face of right case half.
7. Apply a bead of HIGH-PERFORMANCE SEALANT, GRAY (Part No. 99650-02) approximately 0.056 in (1.42 mm) wide to the split line face and around the two dowel pins of right crankcase half.
8. See Figure 3-130. Place CRANKSHAFT GUIDE (Part No. HD-42326-B) over end of crankshaft until it contacts shoulder on shaft.
9. Mate case halves. Remove crankshaft guide.

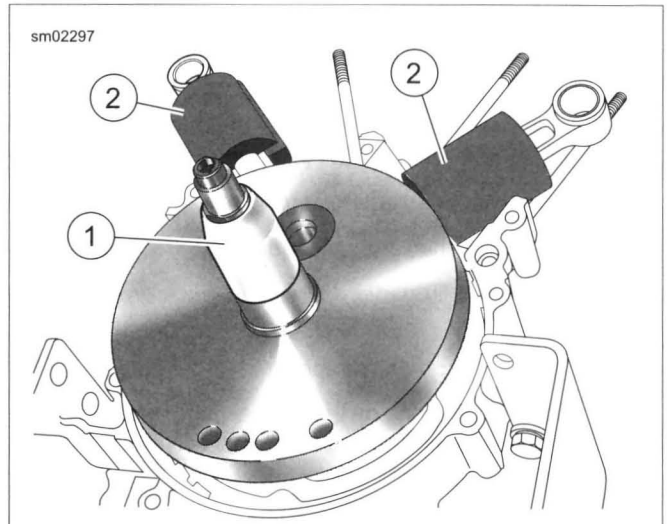


1. **Crankshaft guide**
2. **Water pipe insulation**

**Figure 3-130. Crankshaft Guide**

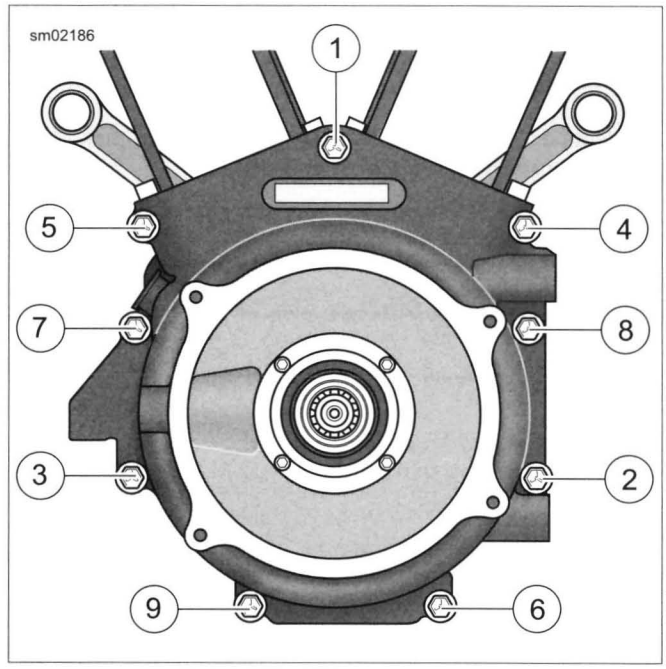


**Figure 3-131. Tightening Crankcase Bolts**

10. See Figure 3-131. Start the nine crankcase bolts and tighten in the following sequence.
    a. Finger-tighten each crankcase bolt.
    b. Tighten the crankcase bolts to 120 **in-lbs** (13.6 Nm) in the order shown.
    c. Following the same sequence, tighten each bolt to 15-19 ft-lbs (20.3-25.8 Nm).
11. Rotate crankcase assembly so sprocket shaft is pointing straight up.

12. Install thrust washer on sprocket shaft with "THIS SIDE OUT" facing out (and the chamfer inboard). If using original part without markings, orient to preserve existing wear pattern.
13. See Figure 3-132. Install **new** oil seal into bearing bore.
    a. Obtain pilot adapter, pilot shaft, short collar, bearing, large flat washer and handle from SPROCKET SHAFT BEARING INSTALLER (Part No. HD-97225-55C).
    b. Turn pilot adapter into sprocket shaft.
    c. Turn pilot shaft onto pilot adapter.
    d. Verify that lip garter spring is in place on both sides of oil seal.
    e. Install sprocket shaft spacer in oil seal bore.
    f. With the lettering on the oil seal facing outward, slide sprocket shaft spacer and oil seal over pilot shaft until it contacts bearing bore.
    g. Slide SPROCKET SHAFT OIL SEAL INSTALLER (Part No. HD-39361-B) over pilot shaft until it contacts oil seal.

    *NOTE*

    *Sparingly apply graphite lubricant to the pilot shaft to prolong service life and provide smooth operation.*

    h. Slide short collar, bearing and large flat washer onto pilot shaft. Turn handle on to complete assembly of tool.
14. Rotate handle clockwise until oil seal installer makes firm contact with crankcase stator mount.
15. Remove tool components from sprocket shaft.
16. Rotate crankcase in engine stand so that cam cover flange is facing upward.
17. Apply a liberal amount of SCREAMIN' EAGLE ASSEMBLY LUBE to the main bearing. Rotate flywheel assembly to distribute lube.
18. Install oil pump and cam support plate. See 3.24 CAM COMPARTMENT AND COMPONENTS.
19. Complete engine assembly.

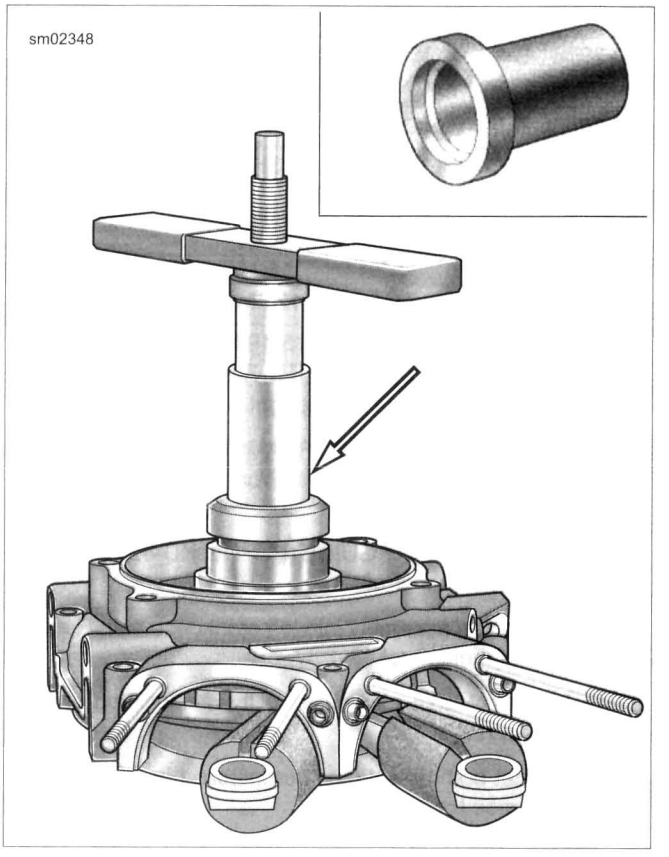


**Figure 3-132. Sprocket Shaft Oil Seal Installer**

## REMOVAL

1. Position motorcycle on a lift.
2. See Figure 3-133. Remove the engine oil drain plug (4). Remove fill plug/dipstick and oil filter. Drain oil into suitable container.
3. Remove the transmission drain plug (7) and drain transmission lubricant into suitable container.
4. Remove screws (8) that secure the oil pan to the transmission housing.
5. Remove oil pan (5) and gasket (1). Discard gasket.
6. Remove baffle assembly (3) and spring (2) from oil pan.
7. Thoroughly inspect and clean the oil pan, especially if there was a major engine failure. Debris that remains in the pan causes a repeat failure. Install a **new** oil pan if necessary.

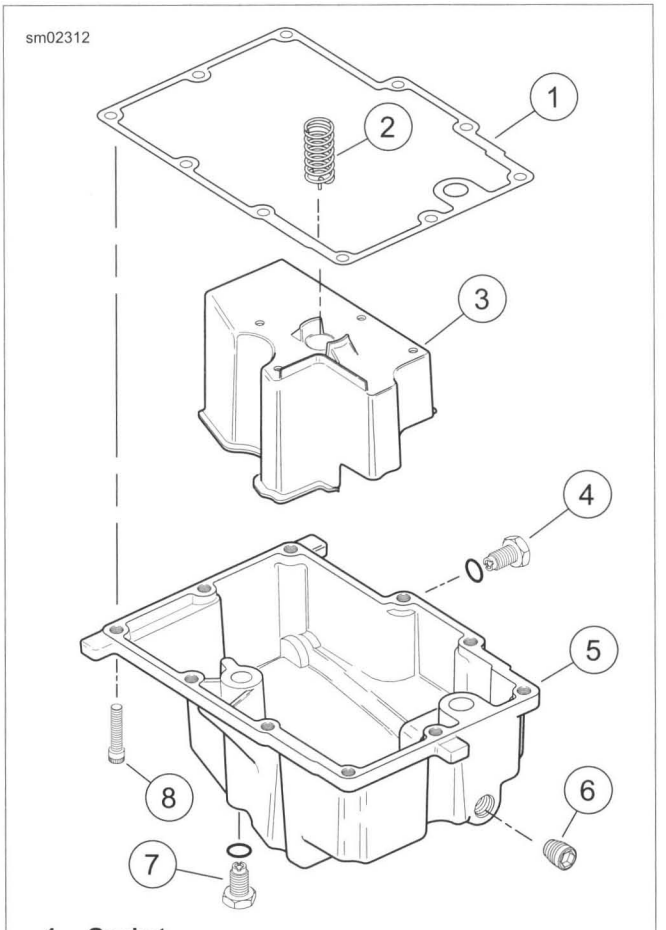


1. **Gasket**
2. **Spring**
3. **Baffle assembly**
4. **Engine oil drain plug**
5. **Oil pan**
6. **Pipe plug**
7. **Transmission drain plug and O-ring**
8. **Screw (10)**

**Figure 3-133. Oil Pan Assembly**

## INSTALLATION

| FASTENER | TORQUE VALUE | |
|---|---|---|
| Oil pan screws | 132-156 **in-lbs** | 14.9-17.6 Nm |
| Transmission drain plug | 14-21 ft-lbs | 19.0-28.5 Nm |
| Engine oil drain plug | 14-21 ft-lbs | 19.0-28.5 Nm |

1. Clean and examine all flange surfaces.
2. See Figure 3-133. Insert baffle assembly (3) and spring (2) in oil pan.
3. Place **new** gasket (1) on oil pan.
4. Apply a thin coat of HYLOMAR GASKET AND THREAD SEALANT to oil pan flange.
5. Place **new** gasket (1) on oil pan flange. Allow sealer to dry until tacky.

*NOTE*

*If oil pan fasteners will be reused, apply 1-2 drops of LOCTITE 243 MEDIUM STRENGTH THREADLOCKER AND SEALANT (blue). **New** fasteners have a lock patch applied.*

6. Position oil pan with gasket on bottom of transmission and loosely install screws (8). Tighten to 132-156 **in-lbs** (14.9-17.6 Nm) following sequence shown in Figure 3-134.
7. Clean engine oil and transmission lubricant drain plugs. Replace O-rings as required.
8. Install transmission drain plug and O-ring (5). Tighten to 14-21 ft-lbs (19.0-28.5 Nm).
9. Install engine oil drain plug and O-ring (3). Tighten to 14-21 ft-lbs (19.0-28.5 Nm).
10. Remove motorcycle from lift.
11. Replace fluids.
    a. Fill transmission with transmission lubricant. See 1.9 TRANSMISSION LUBRICANT.
    b. Install engine oil filter. Fill engine oil. See 1.5 ENGINE OIL AND FILTER.

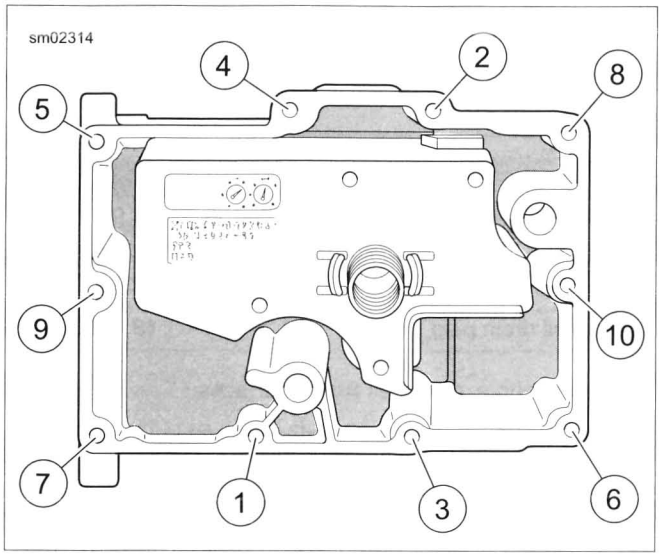


**Figure 3-134. Oil Pan Torque Sequence**